DESIGN & CONSTRUCTION STANDARDS

REVISIONS:

July	1961
December	1967
July	1979
March	1989
July	1993
October	2009
June	2012
March	2017
September	2019

APPROVED:

9/3/19

CITY ENGINEER

9/3/19

DIRECTOR OF PUBLIC WORKS

PUBLIC WORKS

PREFACE

The June 2012 edition of the Design and Construction Standards is now available for use by the development community. This document is provided to ensure consistent, safe and up-to-date design practices for all improvement projects within the City of Hampton.

The document contains four sections addressing the following topics:

1. Drainage
2. Sanitary Sewer
3. Streets
4. Addendum

Notable updates include the addition of a sidewalk drain trough and curb and gutter replacement detail, revisions to the air vent and force main connection details and modifications to various vehicular entrance details. An addendum was also added to provide additional information in the areas of drainage, sanitary sewer and road construction as well as capture design requirements removed from the recently revised site plan and subdivision ordinances.

In addition to the Standards updates, the Public Works Department has also revised the Utility Policy and created an Outdoor Lighting Policy and Procedures guide. Companion documents to the Public Works Design and Construction Standards, these documents will be bound separately for the convenience of all users.

These standards, policies and procedures are the result of the combined efforts of the various divisions of the Department of Public Works. City staff looks forward to working with engineers, surveyors and developers as we implement these new standards. It is our hope that this edition will be used as a tool to make the design and review process in the city as efficient as possible.

Please visit the Public Works website to obtain copies of these standards. The site is located at www.hampton.gov/publicworks.

TABLE OF CONTENTS

DRAINAGE

	Index sheet
CDI	Curb Drop Inlet
CDI-C	Curb Drop Inlet Cover
CDI-S	Curb Drop Inlet – Saddle
MH-1	Precast concrete manhole
PD-1	Paved Ditch – Non Vehicular
PD-2	Paved Ditch – Vehicular
YD	Yard Drain
YD-S	Yard Drain – Saddle

SANITARY

	Index sheet
AV	Air Vent Assembly
BSMH	Brick Shallow Sanitary Manhole
FM-1	2” Force Main Connection
FM-2	4” Force Main Connection
MH	Manhole Frame & Cover
PB	Pipe Bedding
PMH	Precast Sanitary Manhole

STREETS

	Index sheet
BAR	Standard Barricade
CG-10B	Street Intersection Valley Gutter
CG-12MOD	Sidewalk Ramp
CG-9D	Residential Driveway Entrance
CUL	Cul-de-sac
PAV-1	Paver Detail – Non Vehicular
PAV-2	Paver Detail – Vehicular
PC	Pavement & Site Restoration
PC-1	Curb & Gutter Replacement
RWPL	Right-of-way Planting Locations
SD	Sidewalk Drain
SPF	Signal Pole Foundation
ST-RES	Residential Street Cross Section
SW	Sidewalk
VE-1	Residential Driveway Entrance
VE-2	Residential Driveway Entrance
VE-3	Commercial Driveway Entrance
VE-3A	Commercial Driveway Entrance
VE-5	Vehicular Driveway Entrance

ADDENDUM

CHAPTER 1	Drainage
CHAPTER 2	Standards for Streets & Circulation
CHAPTER 3	Sewage Disposal System
CHAPTER 4	Miscellaneous Requirements

DRAINAGE

Standards affecting construction of storm drain systems are included in this section
Refer to Regional Construction Standards or VDOT for details not listed below.

Designation	Description	Comments	Latest Revision Date
CDI	Curb drop inlet		March 15, 2017
CDI-C	Curb drop inlet Cover		October 2, 2009
CDI-S	Curb drop inlet Saddle	42" RCP I.D. min.	June 29, 2012
MH-1 *	Precast concrete manhole	See VDOT Road & Bridge Standards for details	June 29, 2012
PD-1	Paved Ditch	For use in non vehicular areas	June 29, 2012
PD-2	Paved Ditch	For use in vehicular areas	June 29, 2012
YD	Yard Drain		October 2, 2009
YD-S	Yard Drain Saddle	42" RCP I.D. min.	October 2, 2009

*** Note:** Use City of Hampton MH Frame & Cover with this structure

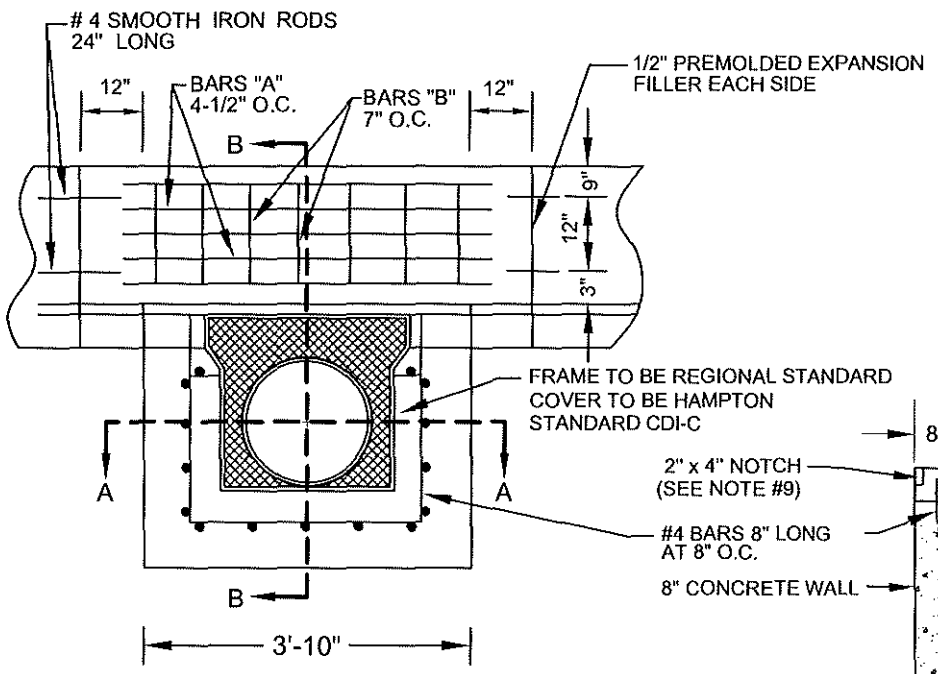

BAR SCHEDULE

QUANTITY	BARS	SIZE	LENGTH
5	A	#4	60"
7	B	#4	18"

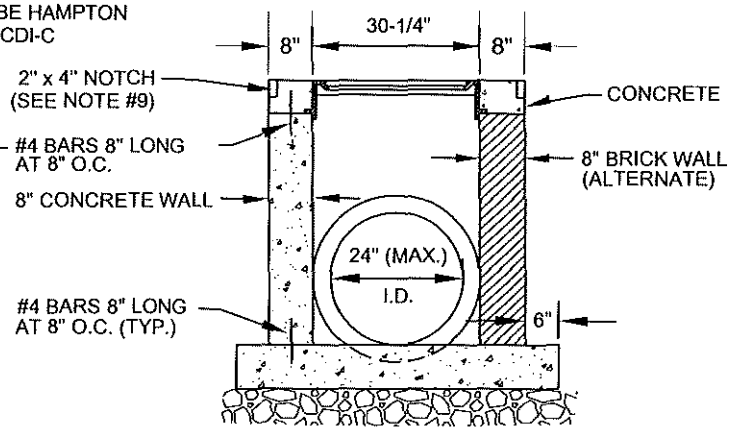

SECTION A-A
(N.T.S.)

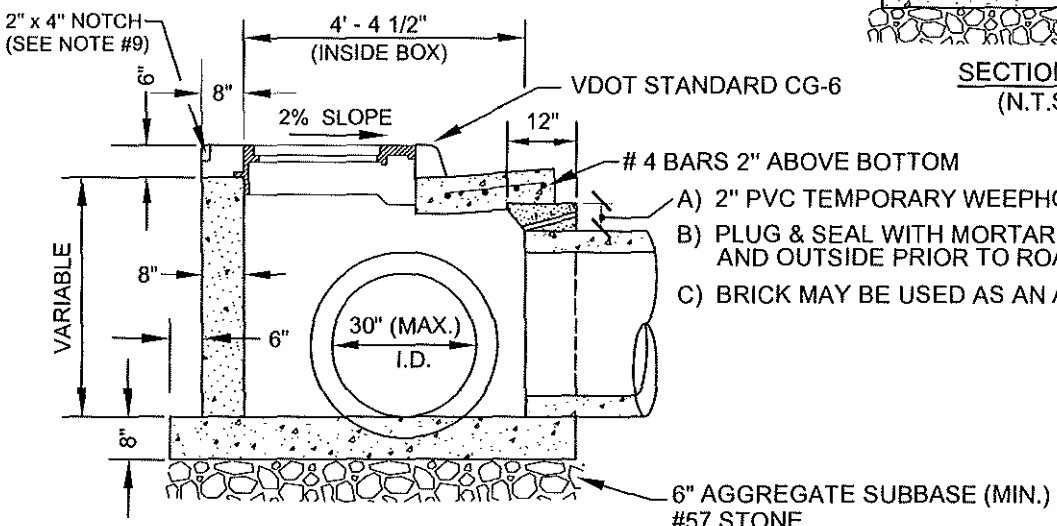

A) 2" PVC TEMPORARY WEEPHOLE.
B) PLUG & SEAL WITH MORTAR FROM THE INSIDE AND OUTSIDE PRIOR TO ROADWAY PAVING.
C) BRICK MAY BE USED AS AN ALTERNATE TO CONCRETE.

SECTION B-B
(N.T.S.)

NOTES:

1. USE OF THIS STANDARD REQUIRES APPROVAL FROM THE DIRECTOR OF PUBLIC WORKS OR DESIGNEE.
2. BRICK STRUCTURE MAY BE USED AS AN ALTERNATE TO PRE-CAST OR CONCRETE CAST IN PLACE.
3. 1/2" MORTAR PARGING OUTSIDE AND INSIDE OF BRICK STRUCTURE.
4. STEPS ARE TO BE CAPITOL FOUNDRY OF VA, INC. ST-PS-1 OR EQUIVALENT.
5. PIPES ARE TO BE FLUSH WITH INSIDE WALL.
6. ALL CONCRETE IS TO BE 3,000 P.S.I. (28 DAY) AIR ENTRAINED.
7. COMPACT BACKFILL IN 6" - 8" LIFTS.
8. MINIMUM PIPE DIAMETER INTO CDI SHALL BE 12".
9. #4 X 8" SMOOTH DOWELS AT APPROXIMATELY 12 " O.C. TO BE PLACED IN ALL AREAS ADJACENT TO ABUTTING CONCRETE TO PREVENT SETTLEMENT. IN LIEU OF DOWELS, A 2" X 4" NOTCH MAY BE PROVIDED.

Curb Drop Inlet

October 2, 2009

CITY OF HAMPTON, VA. - DESIGN & CONSTRUCTION STANDARDS

CDI

Revised: Mar. 15, 2017

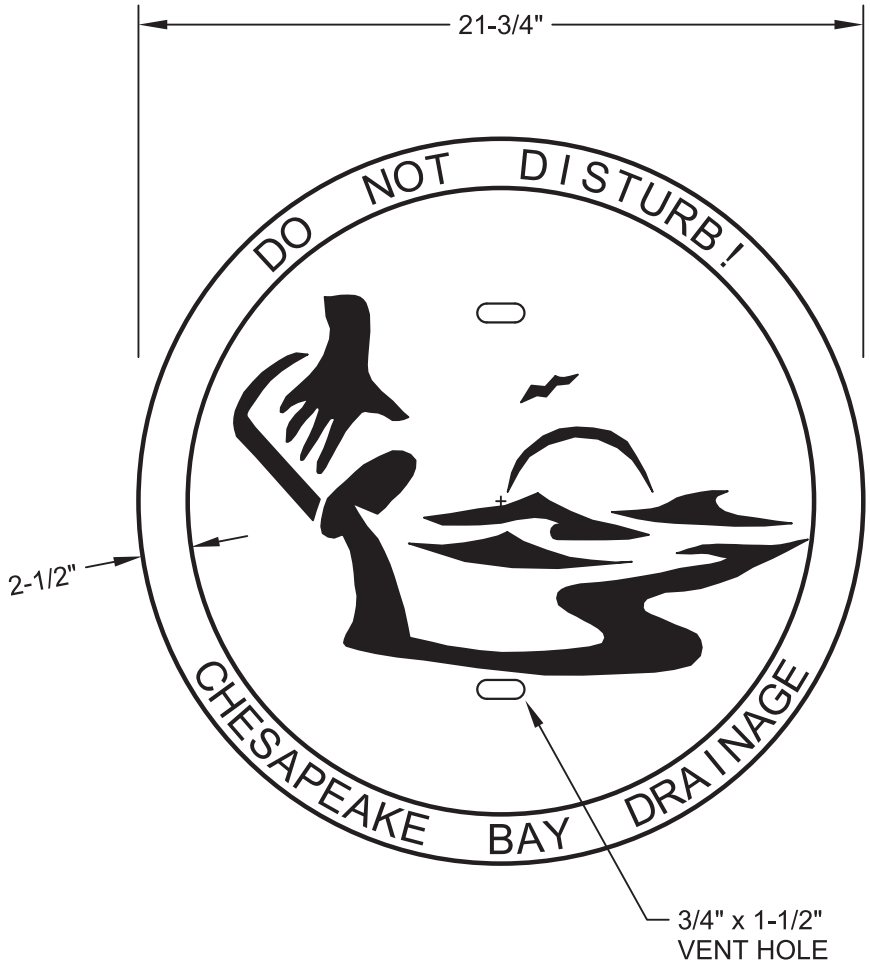

LETTERING ON RIM OF COVER
IS 2" IN HEIGHT AND 1.6" WIDE

NOTE:

COVER IS TO BE USED WITH THE CURRENT REGIONAL AND VDOT INLET.

Curb Drop Inlet Cover

October 2, 2009

CITY OF HAMPTON, VA. - DESIGN & CONSTRUCTION STANDARDS

CDI-C

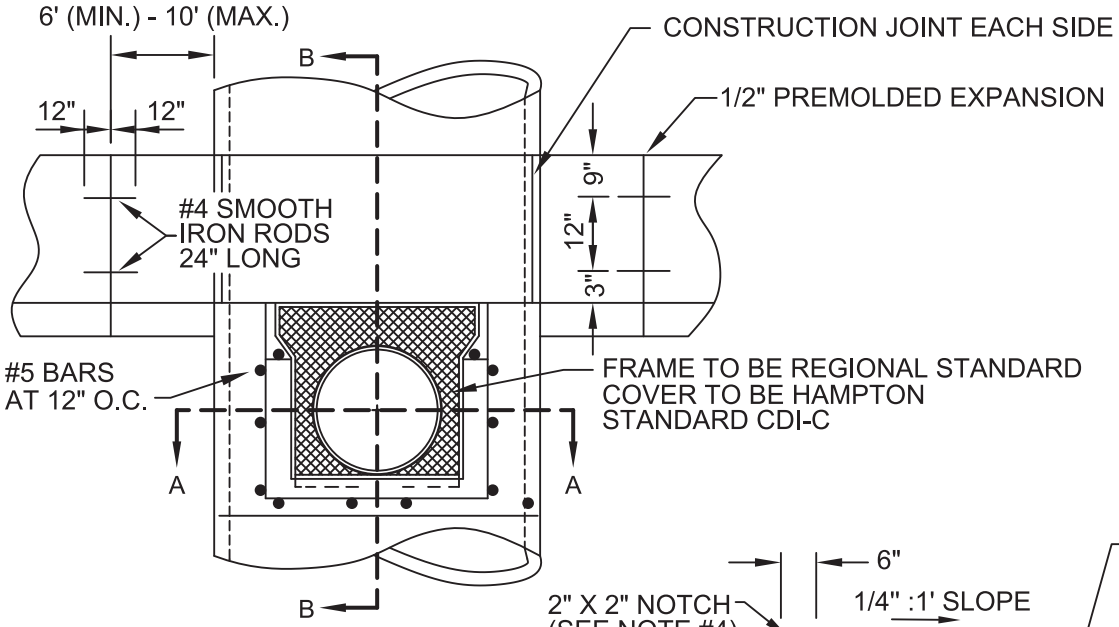

PLAN VIEW
(N.T.S.)

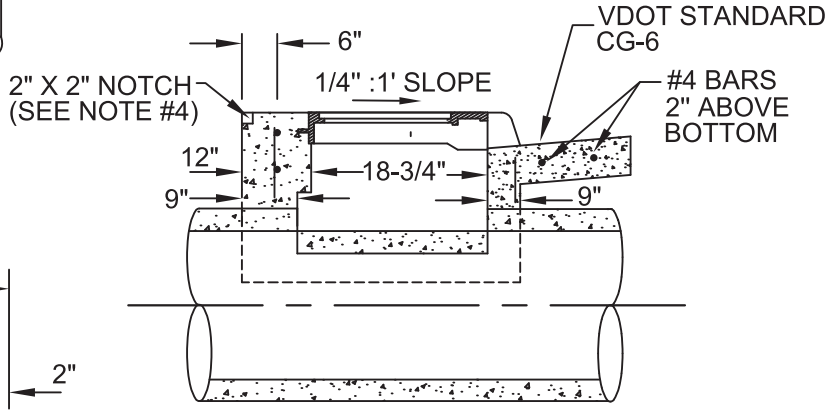

SECTION B-B
(N.T.S.)

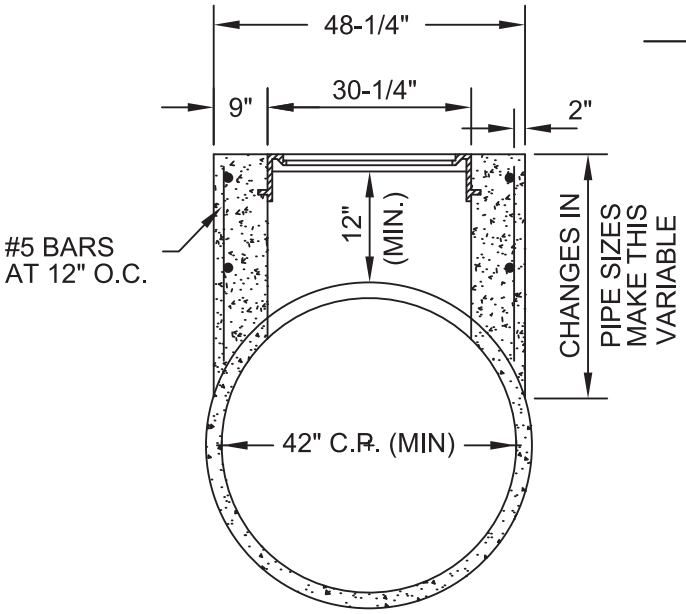

SECTION A-A
(N.T.S.)

NOTES:

1. THIS CURB DROP INLET MAY BE USED ON ALL CONCRETE PIPE 42" AND LARGER IN DIAMETER.
2. ALL CONCRETE IS TO BE 3,000 P.S.I. (28 DAY) AIR ENTRAINED CONCRETE (MIN.).
3. AN 18-3/4" X 30-1/4" HOLE IS TO BE CUT INTO THE TOP OF THE CONCRETE PIPE.
4. #4 X 8" SMOOTH DOWELS @ APPROX. 12" O.C. ARE TO BE PLACED IN ALL AREAS ADJACENT TO ABUTTING CONCRETE TO PREVENT SETTLEMENT. IN LIEU OF DOWELS. A 2" X 2" NOTCH MAY BE PROVIDED.

Curb Drop Inlet Saddle

October 2, 2009

CITY OF HAMPTON, VA. - DESIGN & CONSTRUCTION STANDARDS

CDI-S

Revised: June 29, 2012

FOR USE IN NON-VEHICULAR TRAFFIC AREAS

SMOOTH FLOAT FINISH
TRIANGULAR CROSS SECTION

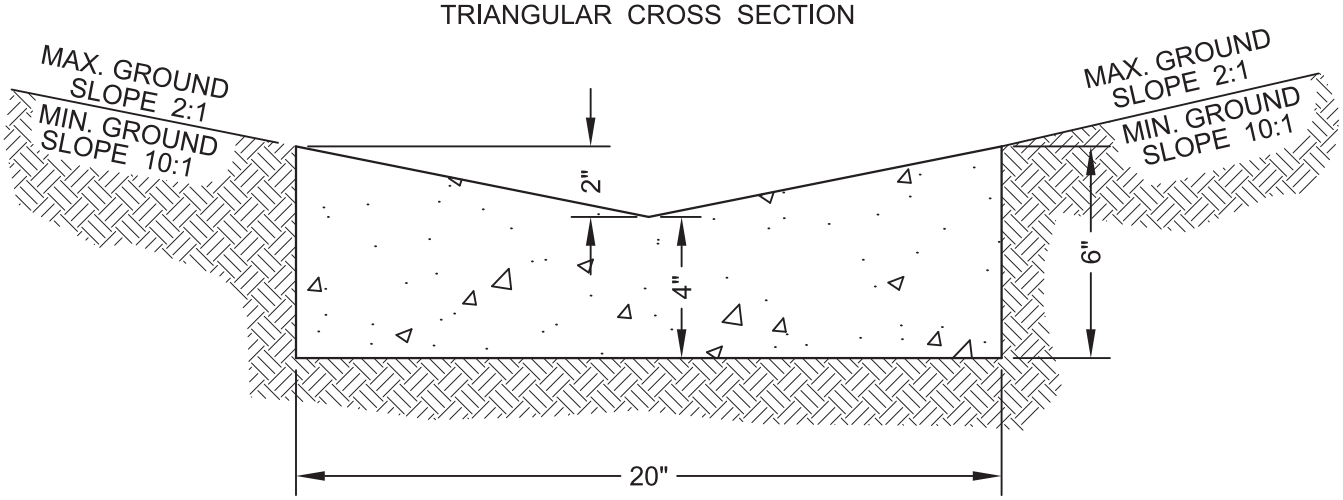

NOTES:

1. ALL CONCRETE TO BE 3,000 P.S.I. (28 DAY) AIR ENTRAINED.
2. CONCRETE IS TO BE CURED WITH AASHTO APPROVED LIQUID MEMBRANE SEALANT.
3. COMPACTED SUB-BASE.
4. REFER TO CURRENT VDOT ROAD & BRIDGE SPECIFICATIONS FOR CONCRETE POURING STANDARDS.
5. 1/2" PREMOLDED EXPANSION JOINT EVERY 50'-0".
6. CONSTRUCTION JOINT EVERY 10'-0".
7. MINIMUM HORIZONTAL GRADE: 0.30%.

Paved Ditch - Non Vehicular

October 2, 2009

CITY OF HAMPTON, VA. - DESIGN & CONSTRUCTION STANDARDS

PD-1

Revised: June 29, 2012

FOR USE WHERE SUBJECTED TO VEHICULAR TRAFFIC

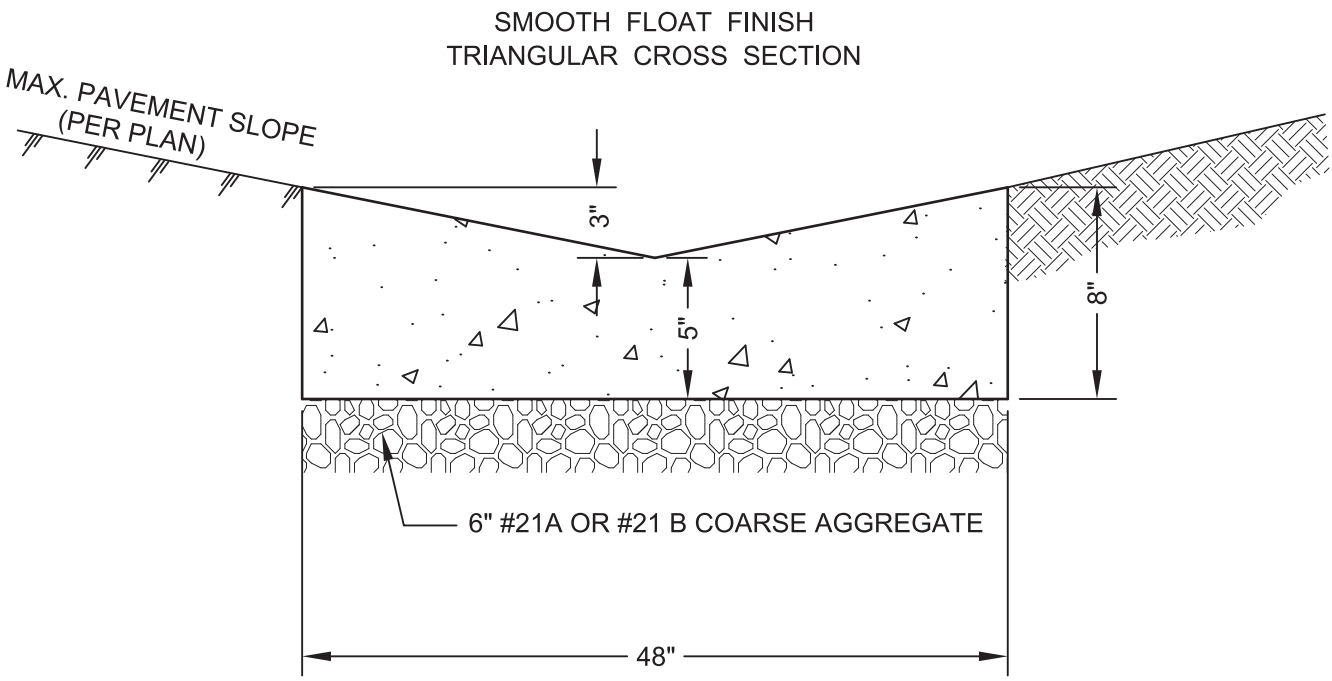

NOTES:

1. ALL CONCRETE TO BE 3,000 P.S.I. (28 DAY) AIR ENTRAINED.
2. CONCRETE IS TO BE CURED WITH AASHTO APPROVED LIQUID MEMBRANE SEALANT.
3. REFER TO CURRENT VDOT ROAD & BRIDGE SPECIFICATIONS FOR CONCRETE POURING STANDARDS.
4. 1/2" PREMOLDED EXPANSION JOINT EVERY 50'-0".
5. CONSTRUCTION JOINT EVERY 10'-0".
6. MINIMUM HORIZONTAL GRADE: 0.30%.

Paved Ditch - Vehicular

October 2, 2009

CITY OF HAMPTON, VA. - DESIGN & CONSTRUCTION STANDARDS

PD-2

Revised: June 29, 2012

PIPE SIZE	INSIDE BOX DIM. LENGTH / WIDTH		MIN. DEPTH INV. TO TOP
12"	26"	26"	21"
15"	26"	26"	24"
18"	26"	26"	27"
24"	26"	*30"	33"
30"	26"	*36"	40"
36"	26"	*42"	46"

* CORBEL TOP TO 26"

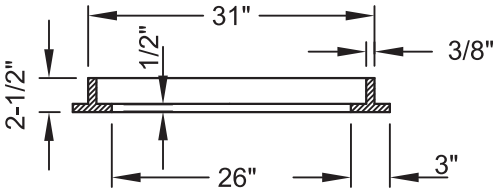

SECTION A-A

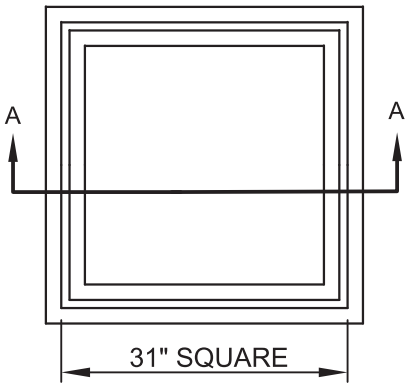

FRAME

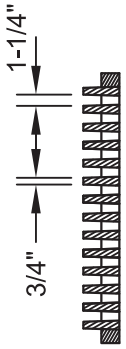

SECTION B-B

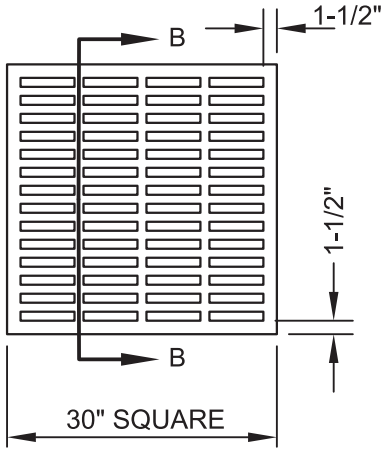

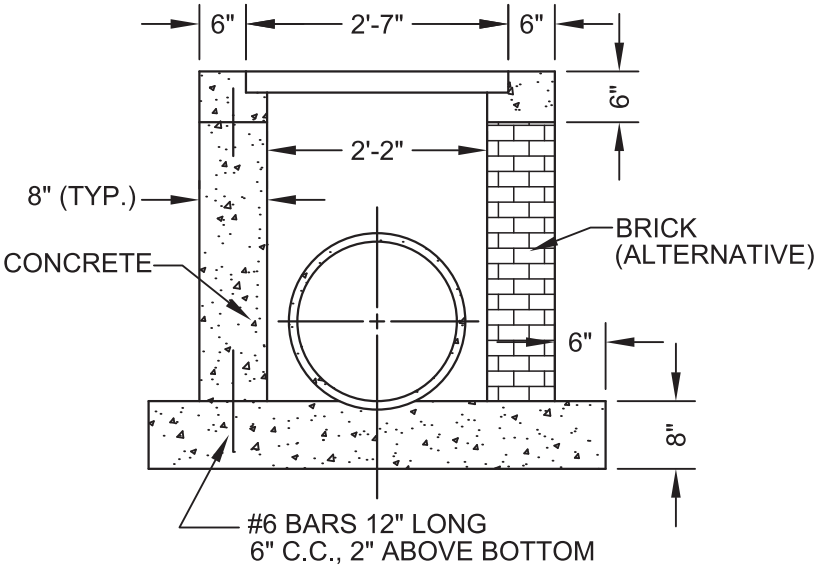

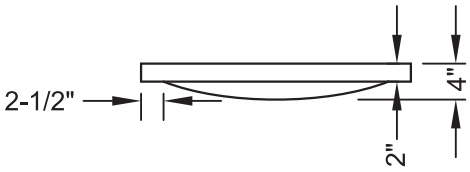

CAST IRON GRATE

NOTES:

1. THE FRAME AND COVER TO BE USED ON THIS YARD DRAIN IS TO BE CAPITOL FOUNDRY DI-1 OR EQUAL.
2. SPECIAL DESIGN BOX IS REQUIRED FOR PIPE SIZES GREATER THAN 36" DIAMETER. CORBEL TOP INTO 26" FOR ALL PIPE SIZES 24" OR GREATER.
3. STEPS TO BE INSTALLED WHEN DEPTH IS OVER 36" (CAPITOL FOUNDRY MH-ST OR EQUAL, 15" VERTICALLY SPACED).
4. WALLS MAY BE BRICK OR CONCRETE, CAST IN PLACE OR PRECAST.
5. 1/2" MORTAR INSIDE AND OUTSIDE OF BRICK STRUCTURE.
6. ALL CONCRETE TO BE 3,000 P.S.I. (28 DAY) AIR ENTRAINED.
7. REFER TO VDOT ROAD & BRIDGE SPECIFICATIONS FOR CONCRETE POURING STANDARDS.

Yard Drain

October 2, 2009

CITY OF HAMPTON, VA. - DESIGN & CONSTRUCTION STANDARDS

YD

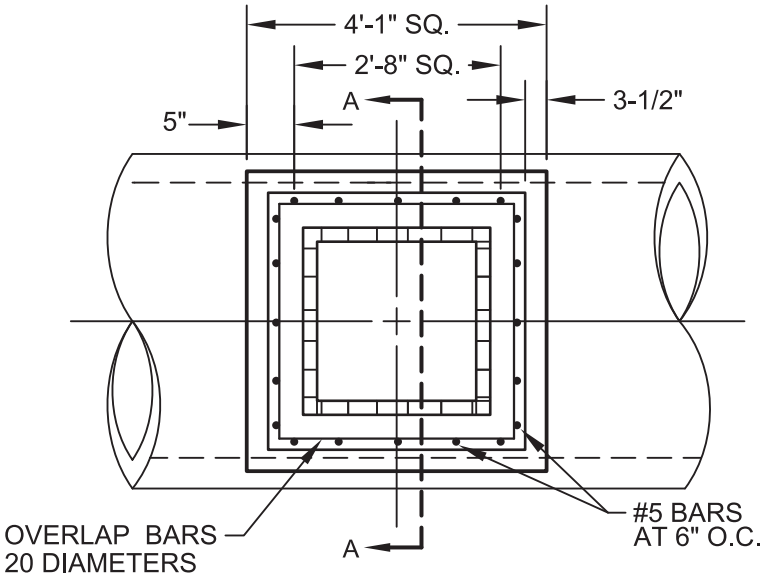

TOP VIEW
(FRAME & GRATE REMOVED)

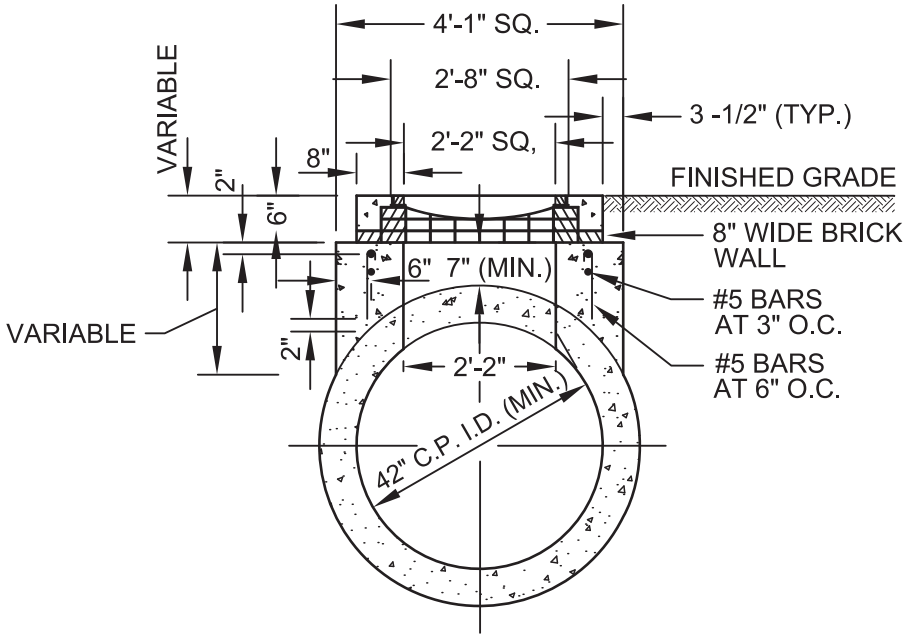

SECTION A-A
(N.T.S.)

NOTES:

1. THIS YARD DRAIN MAY BE USED ON ALL CONCRETE PIPE 42" AND LARGER.
2. THE FRAME AND GRATE TO BE USED ON THIS YARD DRAIN IS TO BE CAPITOL FOUNDRY DI-1 (VDOT STANDARD OR EQUAL).
3. ALL CONCRETE IS TO BE 3,000 P.S.I. (28 DAY) AIR ENTRAINED.
4. A 26" x 26" HOLE IS TO BE CUT INTO THE TOP OF THE CONCRETE PIPE.
5. THIS YARD DRAIN MAY NOT BE USED IN PAVED AREAS.

Yard Drain Saddle

October 2, 2009

CITY OF HAMPTON, VA. - DESIGN & CONSTRUCTION STANDARDS

YD-S

SANITARY SEWER

Standards affecting construction of sanitary sewer systems are included in this section Refer to Regional Construction Standards or VDOT for details not listed below.

Designation	Description	Comments	Latest Revision Date
AV	Air Vent assembly		March 15, 2017
BSMH	Brick Shallow Sanitary Manhole		March 15, 2017
FM-1	2" Force main connection		March 15, 2017
FM-2	4" Force main connection		March 15, 2017
MH	Manhole frame & cover		June 29, 2012
PB	Pipe Bedding		March 15, 2017
PMH	Precast concrete sanitary manhole		October 2, 2009

NOTE: HANDLE AS SHOWN IS WITH VALVE INSTALLED IN OPEN POSITION.

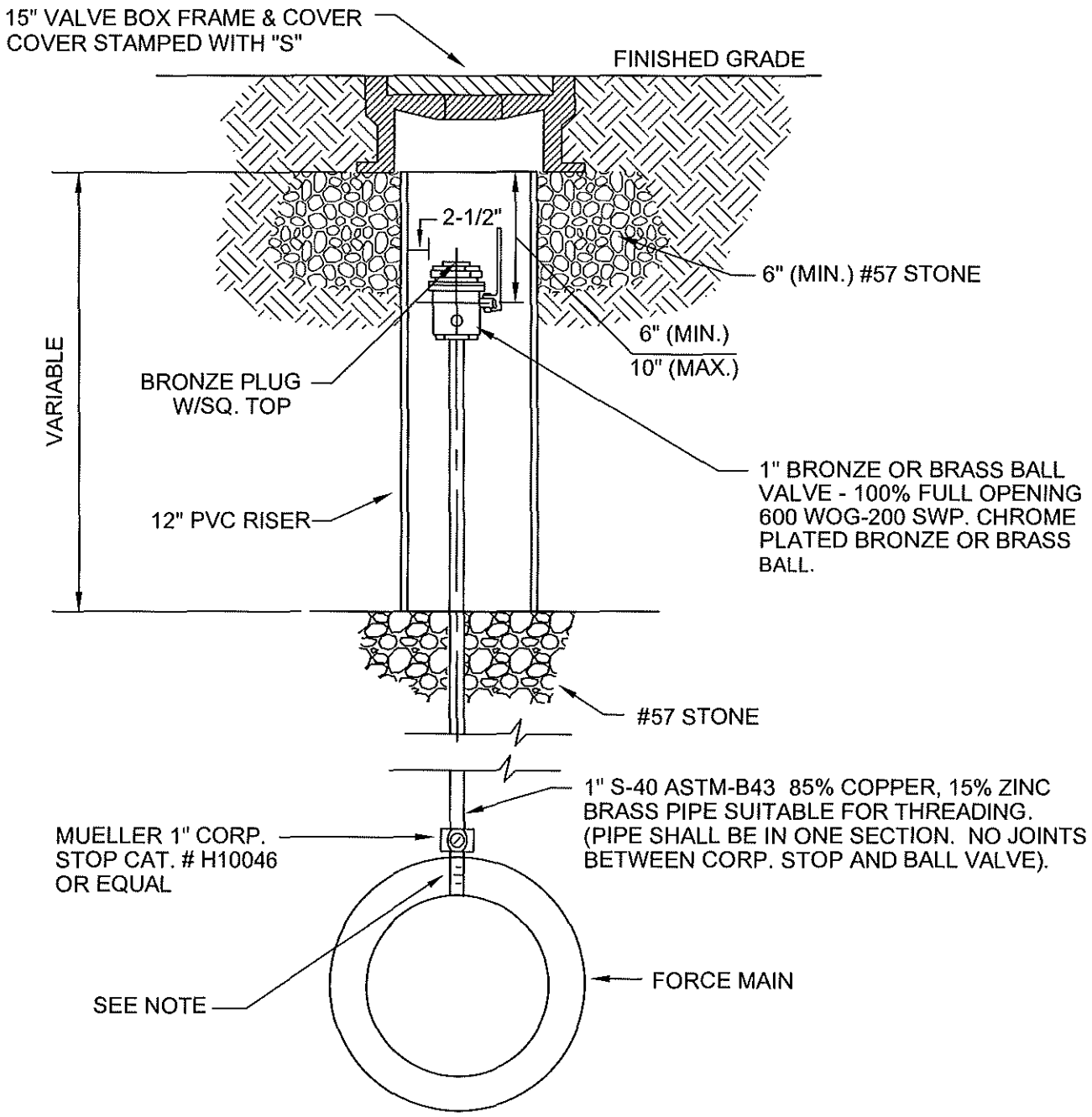

(N.T.S.)

NOTE:

1" TAP FOR AIR VENT SHALL BE STANDARD THREADED TAP OR SADDLE TAP DEPENDING ON MANUFACTURER'S RECOMMENDATION FOR TYPE AND THICKNESS OF PIPE USED.

Air Vent Assembly

October 2, 2009

CITY OF HAMPTON, VA - DESIGN & CONSTRUCTION STANDARDS

AV

Revised: Mar. 15, 2017

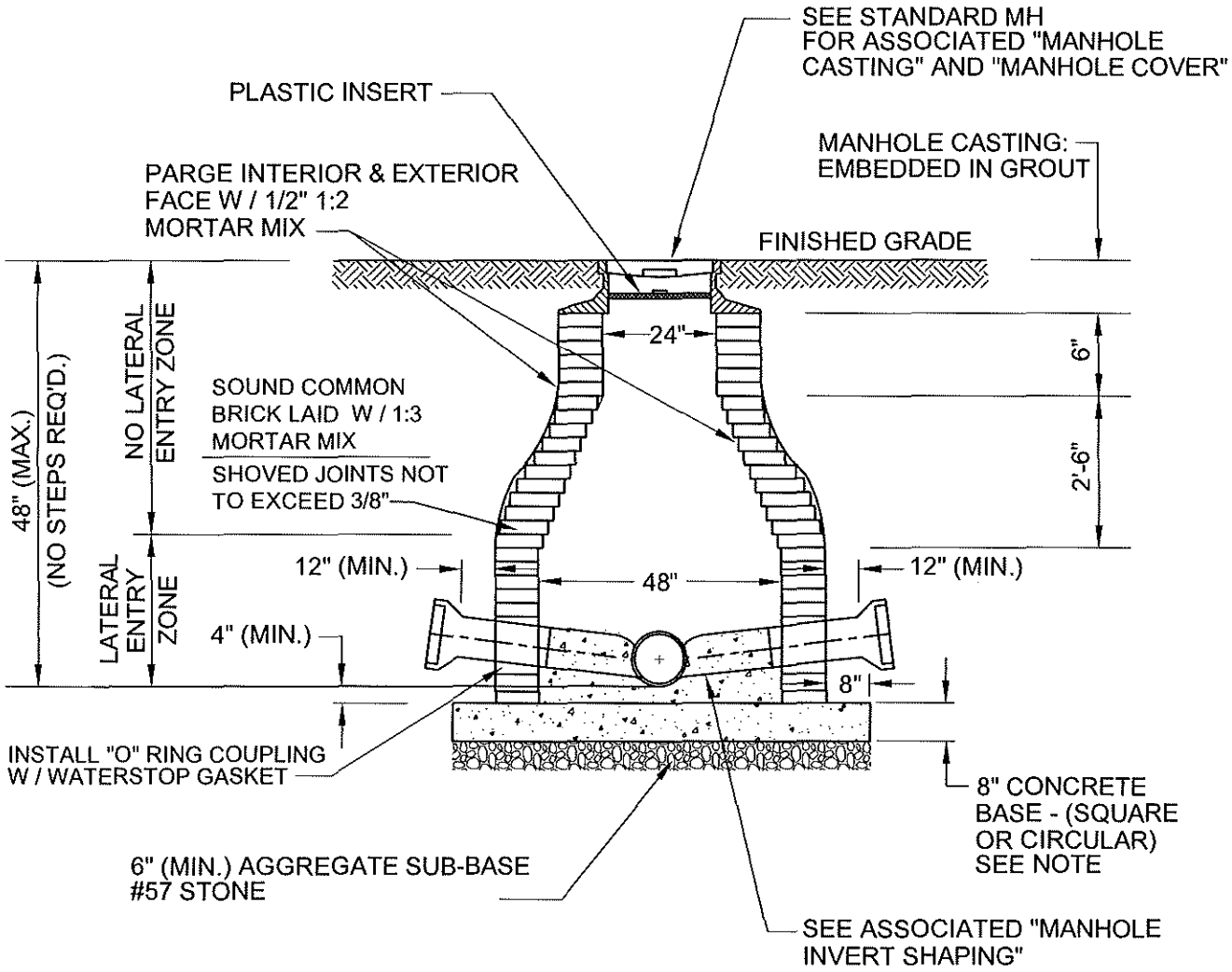

NOTE:

BASE TO BE CONSTRUCTED USING CLASS A-3, 3,000 P.S.I. (28 DAY) AIR ENTRAINED CONCRETE.

Brick Shallow Sanitary Manhole	October 2, 2009
CITY OF HAMPTON, VA. - DESIGN & CONSTRUCTION STANDARDS	BSMH Revised: Mar. 15, 2017

NOTE: HANDLE AS SHOWN IS WITH VALVE INSTALLED IN OPEN POSITION.

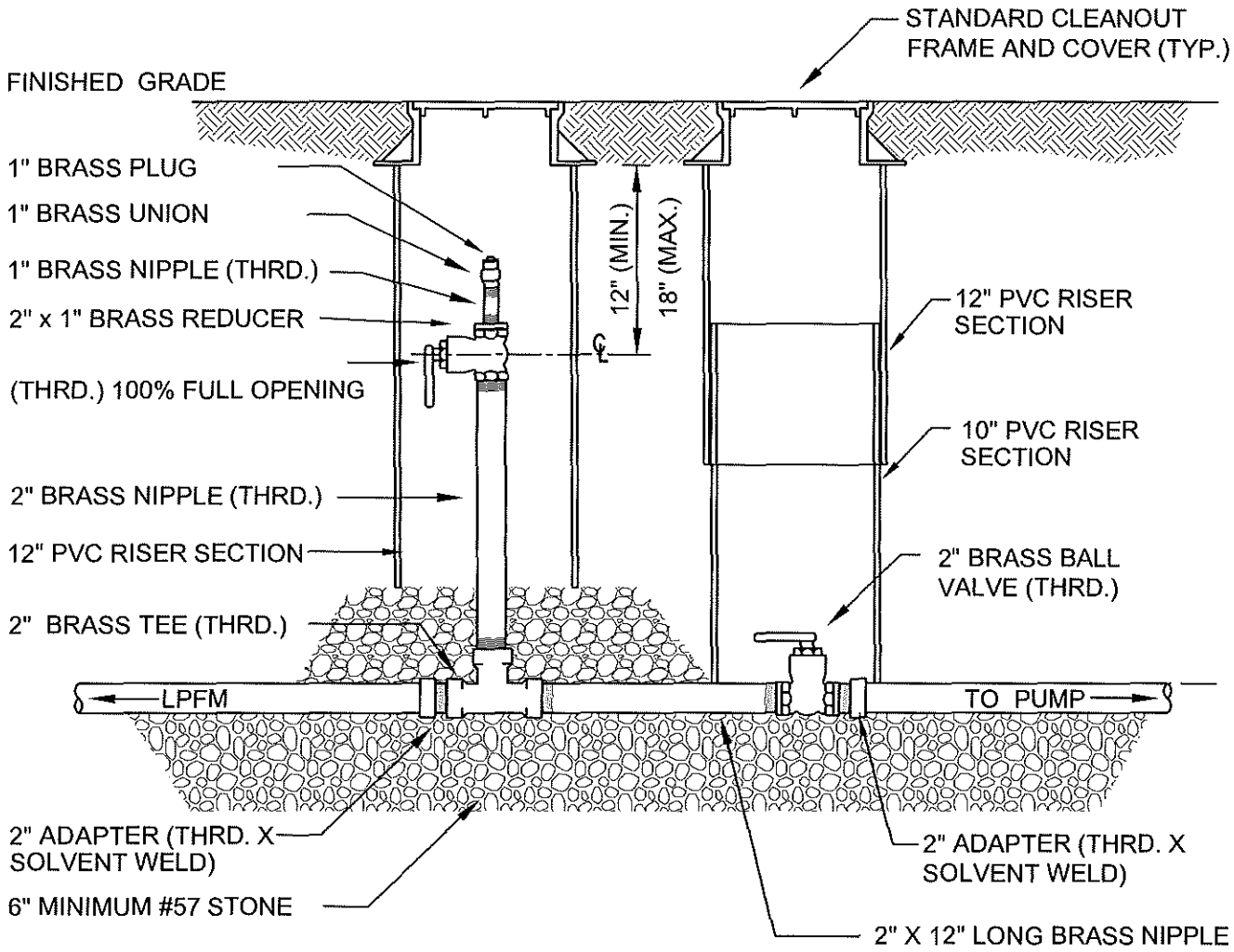

NOTES:

1. RISERS SHALL BE SCH.80 PVC.
2. PROVIDE A 6" MIN. OVERLAP ON THE ISOLATION VALVE RISER .

2" Force Main Connection

October 2, 2009

CITY OF HAMPTON, VA - DESIGN & CONSTRUCTION STANDARDS

FM-1

Revised: Mar. 15, 2017

NOTE: HANDLE AS SHOWN IS WITH VALVE INSTALLED IN OPEN POSITION.

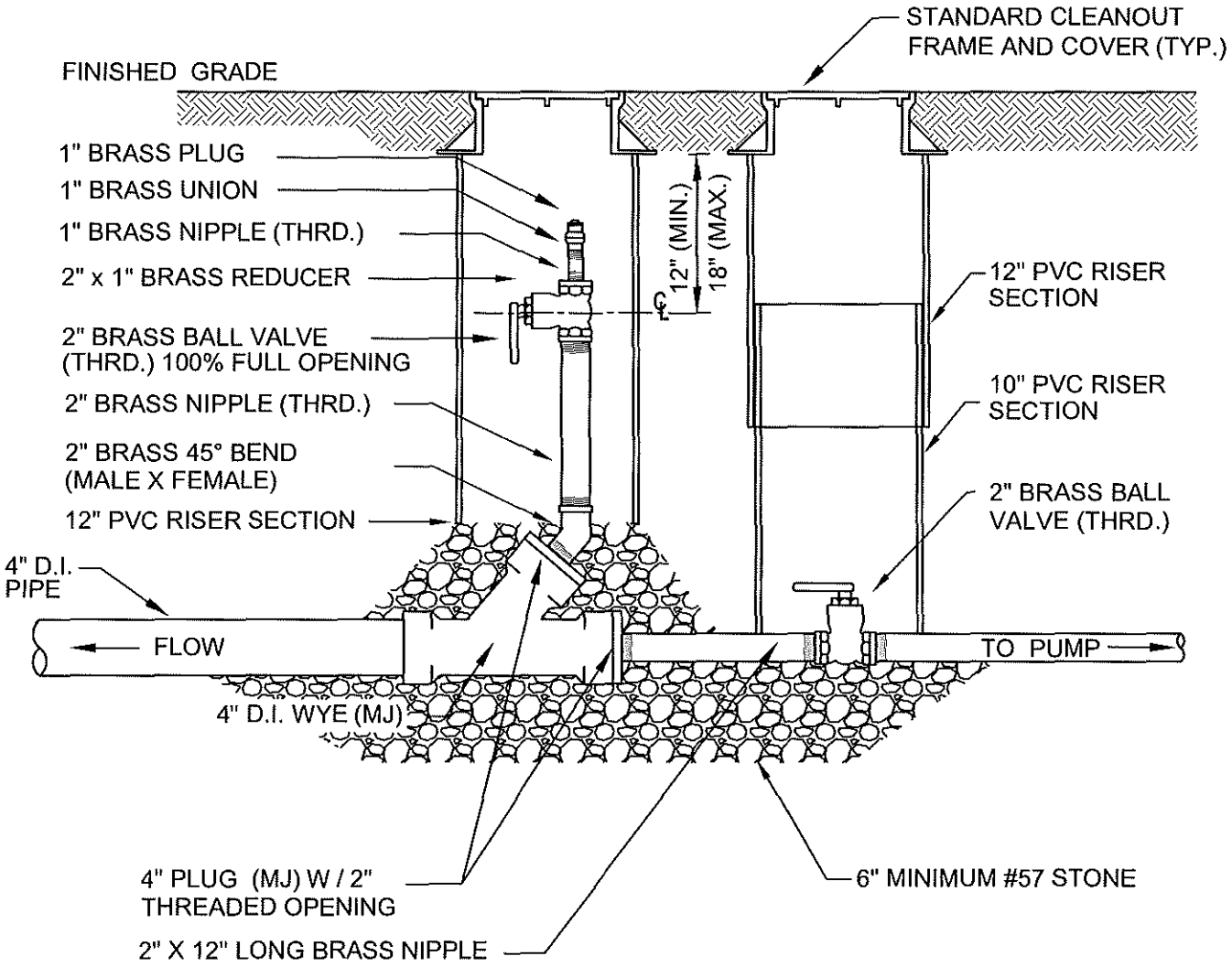

NOTES:

1. RISERS SHALL BE SCH. 80 PVC.
2. PROVIDE A MIN. 6" OVERLAP ON THE ISOLATION VALVE RISER.

4" Force Main Connection

October 2, 2009

CITY OF HAMPTON, VA - DESIGN & CONSTRUCTION STANDARDS

FM-2

Revised: Mar. 15, 2017

AVG. WEIGHT: 405 LBS.
RING: 235 LBS.
COVER: 170 LBS.

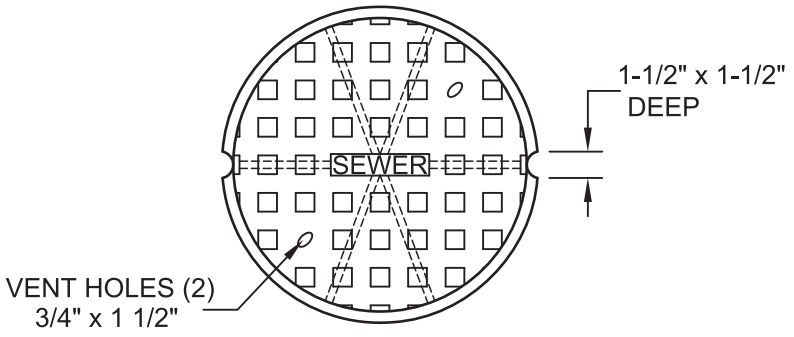

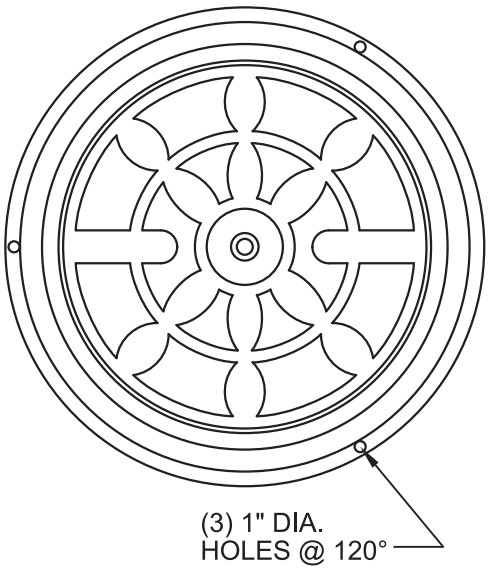

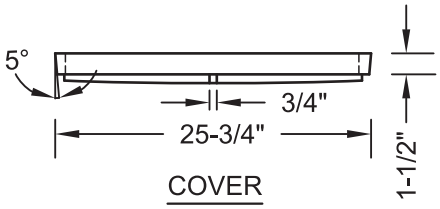

COVER

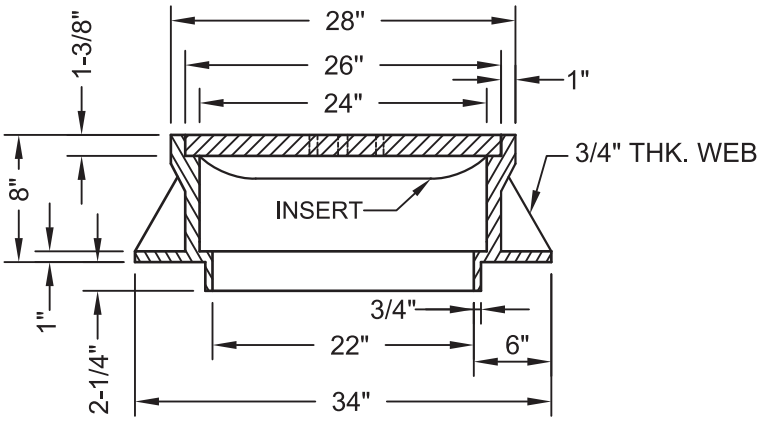

STANDARD MANHOLE FRAME AND COVER

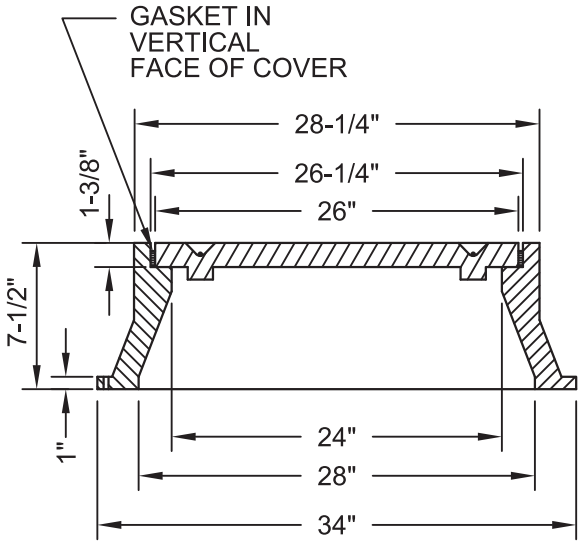

WATERTIGHT MANHOLE FRAME AND COVER

NOTES:

1. CAPITOL FOUNDRY DESIGN NO. MH-C-21-CH, OR EQUAL.
2. CASTINGS SHALL BE COATED WITH ASPHALTIC VARNISH.
3. INSERT REQUIRED FOR SANITARY SEWER MANHOLES ONLY. USE "PARSON ENVIRONMENTAL OR "RAINSTOPPER" BRAND.
5. WHEN WATERTIGHT MANHOLES ARE SPECIFIED, USE CAPITOL FOUNDRY MH-3000-WT, OR EQUAL.
6. CASTINGS ARE TO BE SHOT BLASTED.
7. CASTINGS ARE TO BE ASTM A-48 CLASS 30.
8. MACHINE SEATING SURFACE ON BOTH FRAME AND COVER.
9. TOLERANCE IS TO BE +/- 1/8"
10. USE OF A 4" FRAME AND COVER REQUIRES PRIOR APPROVAL FROM THE DIRECTOR OF PUBLIC WORKS OR DESIGNEE.

Manhole Frame & Cover

October 2, 2009

CITY OF HAMPTON, VA - DESIGN & CONSTRUCTION STANDARDS

MH

Revised: June 29, 2012

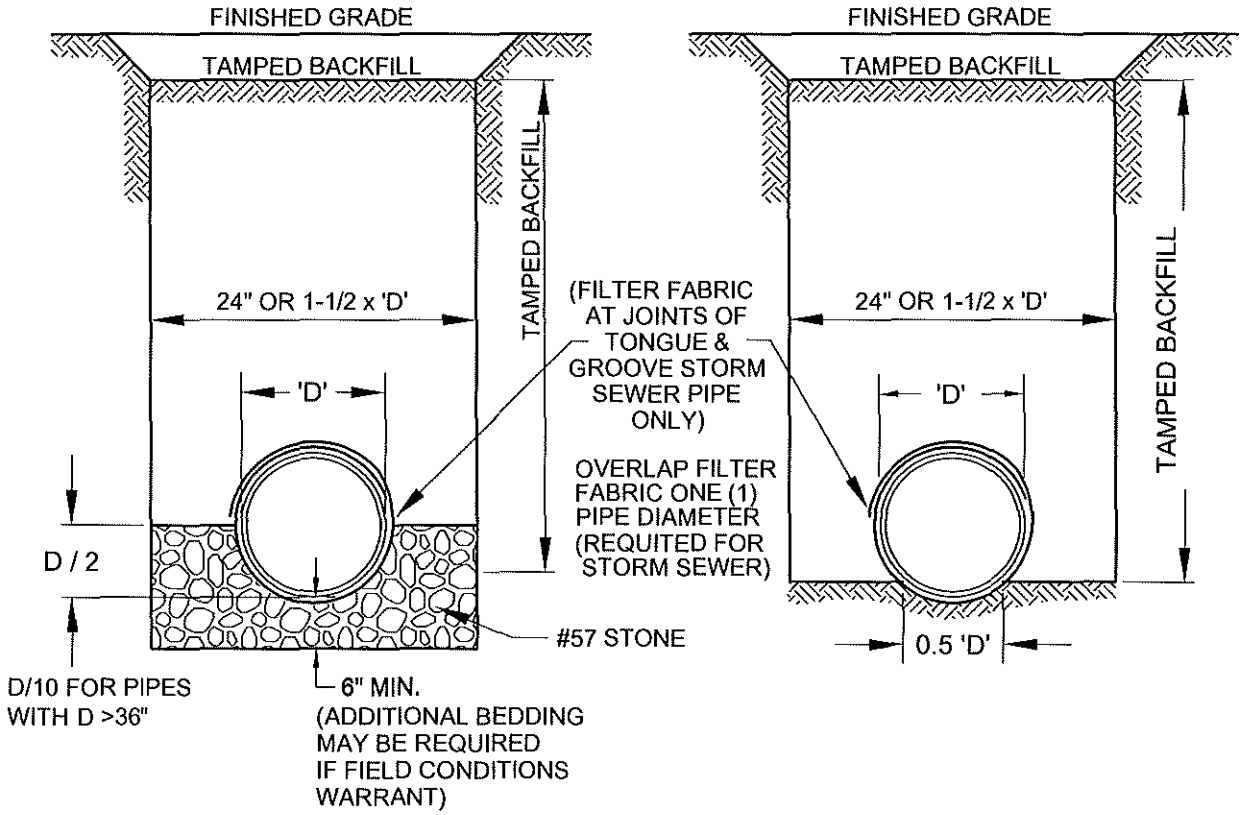

GRAVEL CRADLE
CLASS "B"

EARTH BEDDING
CLASS "C"

NOTES:

STORM SEWER:

1. PIPE IS TO BE CONCRETE ASTM C-76 CLASS III, WHERE SUBJECT TO TRAFFIC. CLASS II MAY BE USED OTHERWISE.
2. JOINTS ARE TO BE TONGUE AND GROOVE WITH RUBBER COMPRESSION JOINTS OR BUTYL - RUBBER SIMILAR TO BUTYL-TITE OR OTHER APPROVED EQUAL COMPLYING TO FEDERAL SS-S-210-A. OR BELL - SPIGOT W/RUBBER GASKET JOINT COMPILING WITH ASTM C-443.
3. PIPE WITH LIFT HOLES IS NOT ACCEPTABLE.

SANITARY SEWER:

1. PIPE IS TO BE SDR 26 PIPE OR DUCTILE IRON WITH MECHANICAL OR PUSH ON JOINTS. LATERALS ARE TO BE SDR 26 OR DUCTILE IRON.
2. JOINTS WILL BE MADE IN ACCORDANCE WITH MANUFACTURERS RECOMMENDATIONS.

GENERAL:

1. CLASS "B" BEDDING IS REQUIRED UNDER ALL PIPES UNLESS OTHERWISE DIRECTED BY THE DIRECTOR OF PUBLIC WORKS OR DESIGNEE.
2. BACKFILL IS TO BE IN ACCORDANCE WITH HAMPTON STANDARD PC.
3. TRENCH IS TO BE FREE OF WATER PRIOR TO THE INSTALLATION OF ANY PIPE.

Pipe Bedding

October 2, 2009

CITY OF HAMPTON, VA. - DESIGN & CONSTRUCTION STANDARDS

PB

Revised: Mar. 15. 2017

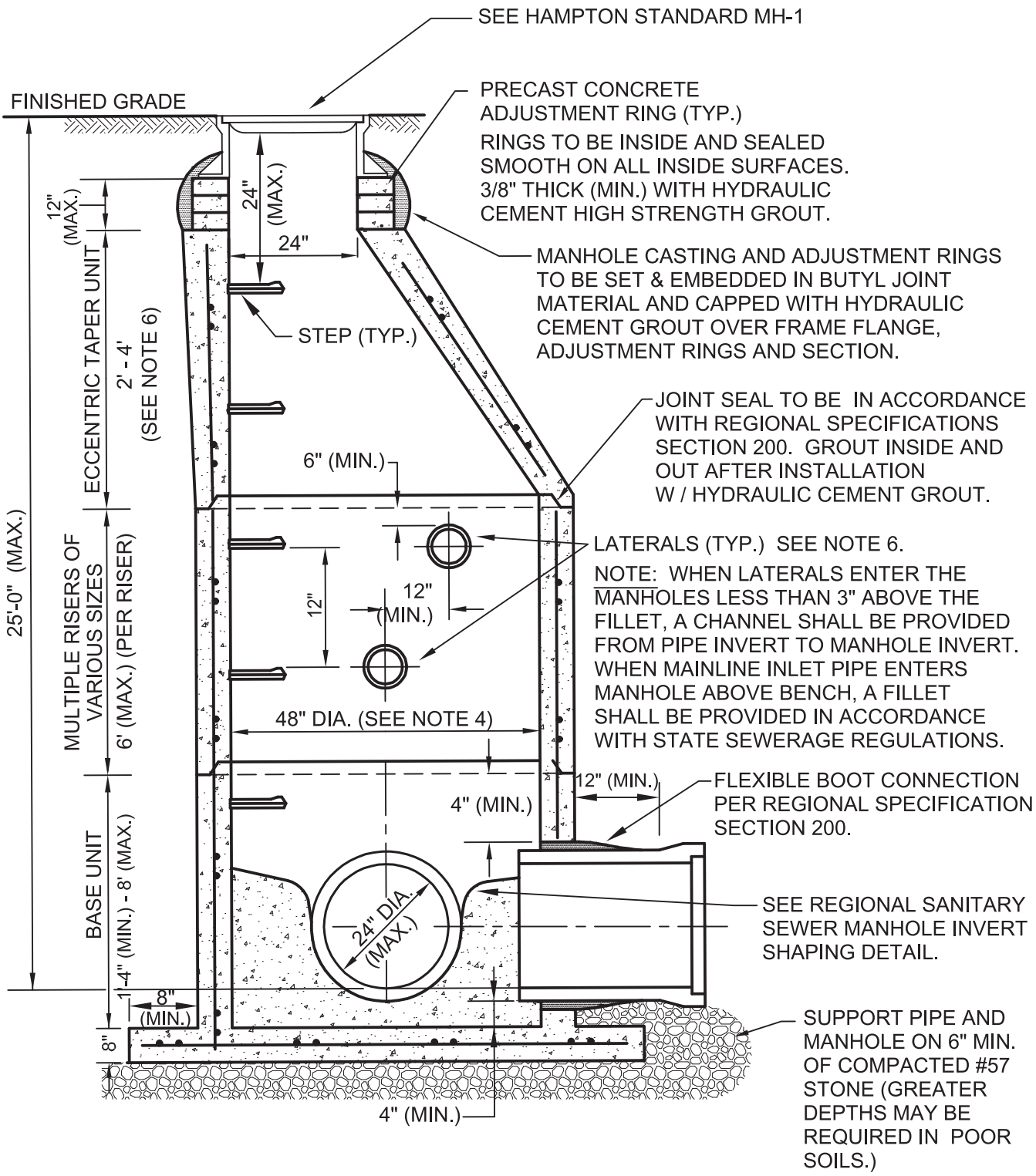

Sheet 1 of 2

Precast Concrete Sanitary Manhole

October 2, 2009

CITY OF HAMPTON, VA - DESIGN & CONSTRUCTION STANDARDS

PMH

NOTES:

1. PRECAST CONCRETE MANHOLE TO BE IN COMPLIANCE WITH ASTM C-478.
2. WALL THICKNESS TO BE 5" MINIMUM FOR 48" INSIDE DIAMETER MANHOLES AND 6" MINIMUM FOR 60" INSIDE DIAMETER MANHOLES.
3. PROVIDE A MAXIMUM OF TWO (2) LIFT HOLES PER SECTION. PLUG LIFT HOLES WATERTIGHT WITH RUBBER PLUGS AND GROUT AFTER INSTALLATION.
4. INSIDE DIAMETER OF MANHOLE MUST INCREASE TO 60" WHEN MANHOLE DEPTH IS GREATER THAN 12 FEET. 60" DIAMETER TO BE CONTINUOUS UP TO CONE SECTION.
5. MAXIMUM OF FOUR (4) LATERALS PER MANHOLE.
6. IF LATERALS ARE TO ENTER INTO THE ECCENTRIC TAPER UNIT, THEY MUST ENTER ON THE NON -TAPERED SIDE.
7. THE ANTIMICROBIAL ADDITIVE, CON^{mic}SHIELD®, SHALL BE ADDED TO THE CONCRETE MIX WATER BY THE PRECASTER TO RENDER THE CONCRETE UNINHABITABLE FOR BACTERIA GROWTH.
8. CON^{mic}SHIELD® AMOUNTS SHALL BE AS RECOMMENDED BY THE MANUFACTURER. THIS AMOUNT SHALL BE INCLUDED IN THE TOTAL WATER CONTENT OF THE CONCRETE MIX DESIGN.
10. CON^{mic}SHIELD® COLOR IDENTIFIER-INDICATOR (CON^{mic}SHIELD®ID) SHALL BE APPLIED TO THE INTERIOR OF EACH PIECE.

Precast Concrete Sanitary Manhole

October 2, 2009

CITY OF HAMPTON, VA - DESIGN & CONSTRUCTION STANDARDS

PMH

STREETS

Standards affecting construction of streets, sidewalks, entrances, crosswalks and restoration of existing infrastructure are included in this section Refer to Regional Construction Standards or VDOT for details not listed below.

Designation	Description	Comments	Latest Revision Date
BAR	Dead end street barricade		June 29, 2012
CG-10B	Street intersection valley gutter		June 29, 2012
CG-12MOD	Sidewalk ramp	For use3 in areas with limited r/w only	March 15, 2017
CG-9D	VDOT standard entrance for use on streets constructed after 2010.	See VDOT Road & Bridge Standards for details	———
CUL	Cul-de-sac		June 29, 2012
PAV-1	Paver detail	For use in non-vehicular areas	June 29, 2012
PAV-2	Paver crosswalk detail	For use in vehicular areas	June 29, 2012
PC	Pavement and site restoration details		October 2, 2009
PC-1	Curb & gutter restoration detail		June 29, 2012
RWPL	Right-of-way planting detail		June 29, 2012
SD	Sidewalk Dain		March 15, 2017
SPF	Sighal Pole Foundation		August 22, 2019
ST-RES	Street section designs		June 26, 2019
SW	Concrete sidewalk detail		August 2, 2019
VE-1	Residential driveway entrance with 3' taper	Use on streets developed prior to 2010	October 10, 2016
VE-2	Residential driveway entrance with 3' radius	Use on streets developed prior to 2010	3 October 3, 2014
VE-3	Commercial driveway entrance repair or replacement	For repair / replacement of existing VE-3 only	March 15, 2017
VE-3A	Commercial driveway entrance		March 15, 2017
VE-5	Vehicular driveway entrance	For use on streets without curb & gutter	June 29, 2012

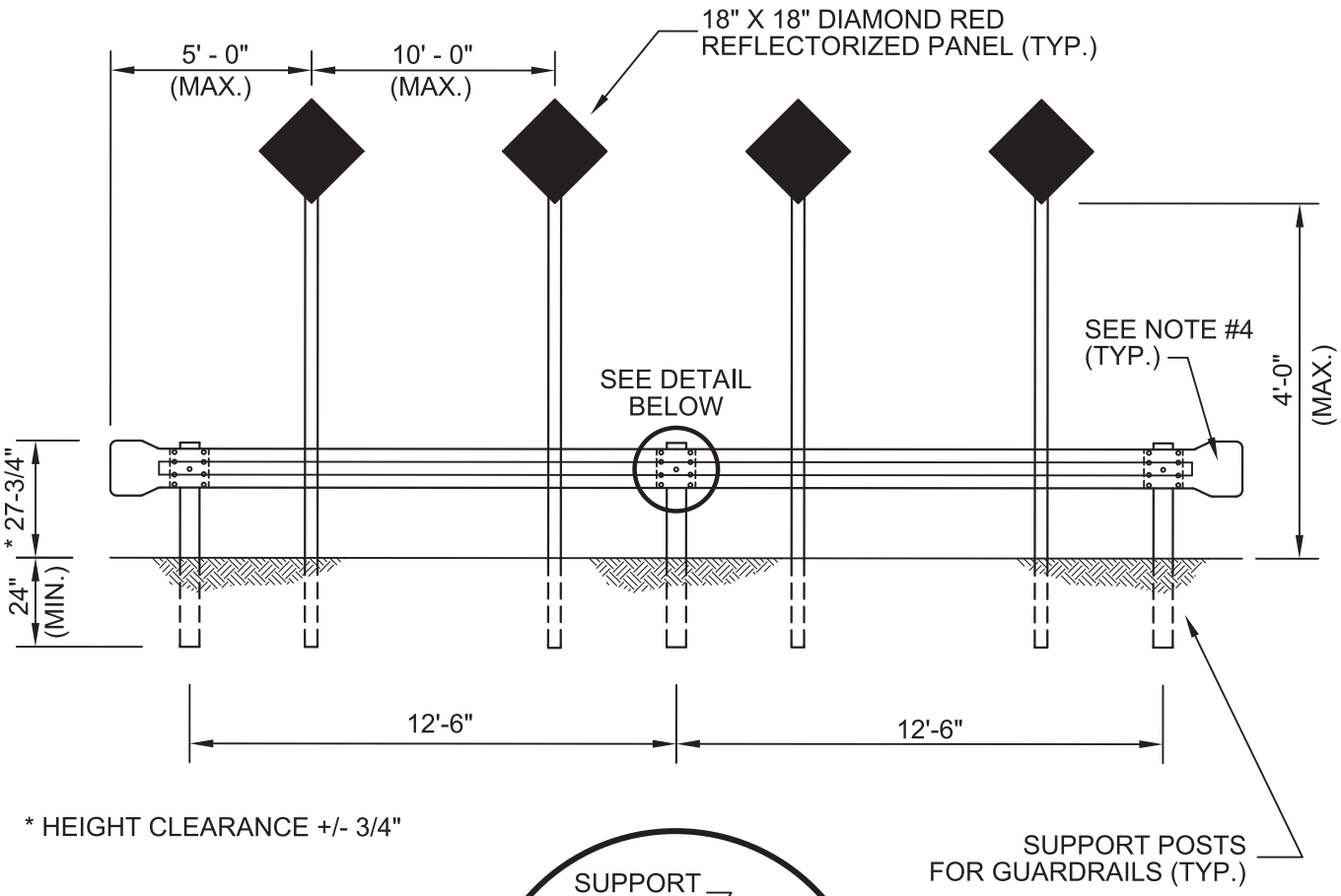

* HEIGHT CLEARANCE +/- 3/4"

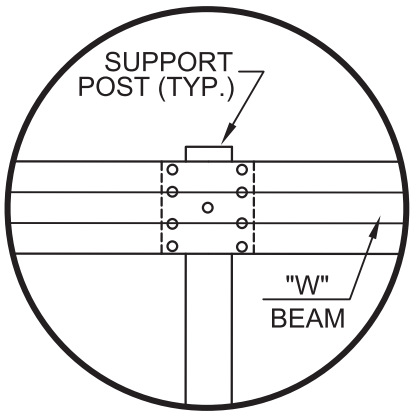

SUPPORT POST DETAIL

(N.T.S.)

NOTES:

1. BARRICADE SHALL EXTEND THE TOTAL WIDTH OF THE ROAD AREA, BUT NOT PAST THE R/W LINE.
2. RAIL SHALL BE CONSTRUCTED WITH 13'-6" SECTIONS.
3. FOR DETAILS OF RAIL ELEMENT, RAIL SPLICE JOINT AND ASSOCIATED HARDWARE, SEE CURRENT VDOT ROAD & BRIDGE SPECIFICATIONS.
4. USE "W" BEAM END SECTION (FLARED).

Standard Barricade

October 2, 2009

CITY OF HAMPTON, VA. - DESIGN & CONSTRUCTION STANDARDS

BAR

Revised: June 29, 2012

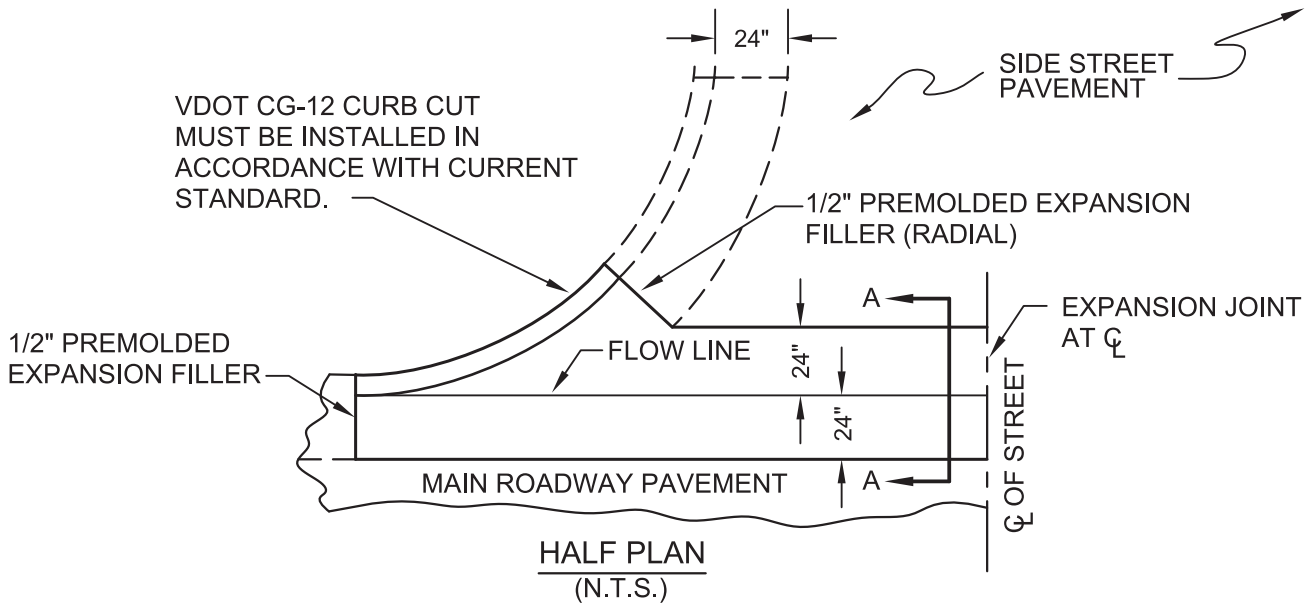

HALF PLAN
(N.T.S.)

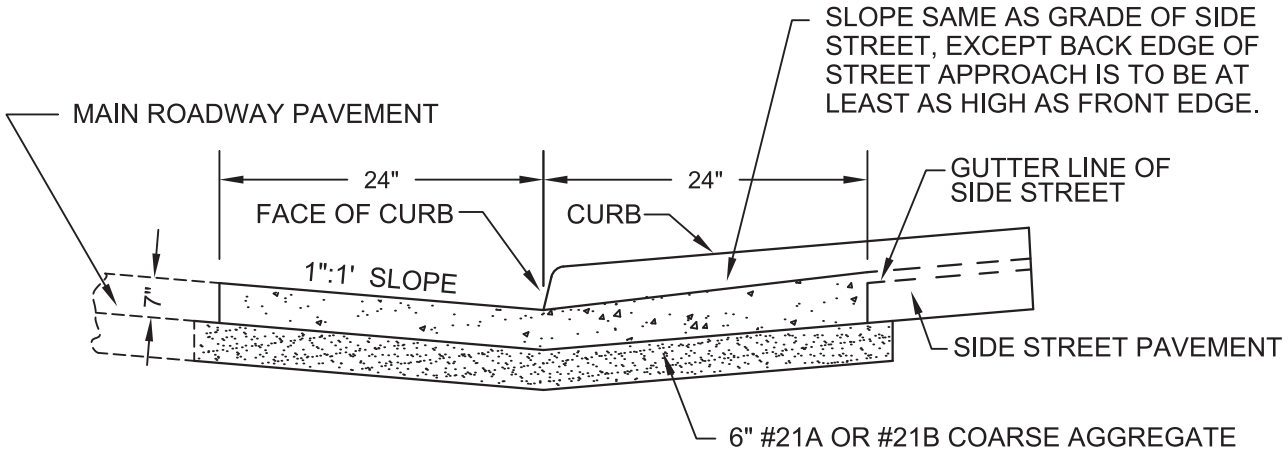

SECTION A-A
(N.T.S)

NOTES:

1. NOT TO BE USED FOR NEW CONSTRUCTION WITHOUT PRIOR APPROVAL FROM THE DIRECTOR OF PUBLIC WORKS OR DESIGNEE.
2. 1/2" PREMOLDED EXPANSION FILLER AT MIDPOINT OF CG-10B.
3. CONSTRUCTION JOINT REQUIRED EVERY 10'-0" FOR THE FULL LENGTH OF THE CG-10B.
4. CONCRETE IS TO BE CURED WITH AASHTO APPROVED LIQUID MEMBRANE SEALANT.
5. ALL CONCRETE TO BE 3,000 P.S.I. (28 DAY) AIR ENTRAINED BROOM FINISHED.
6. REFER TO CURRENT VDOT ROAD & BRIDGE SPECIFICATIONS FOR CONCRETE POURING STANDARDS.

THIS DRAWING IS SYMMETRICAL AT THE ℄

Street Intersection Valley Gutter

October 2, 2009

CITY OF HAMPTON, VA - DESIGN & CONSTRUCTION STANDARDS

CG-10B

Revised: June 29, 2012

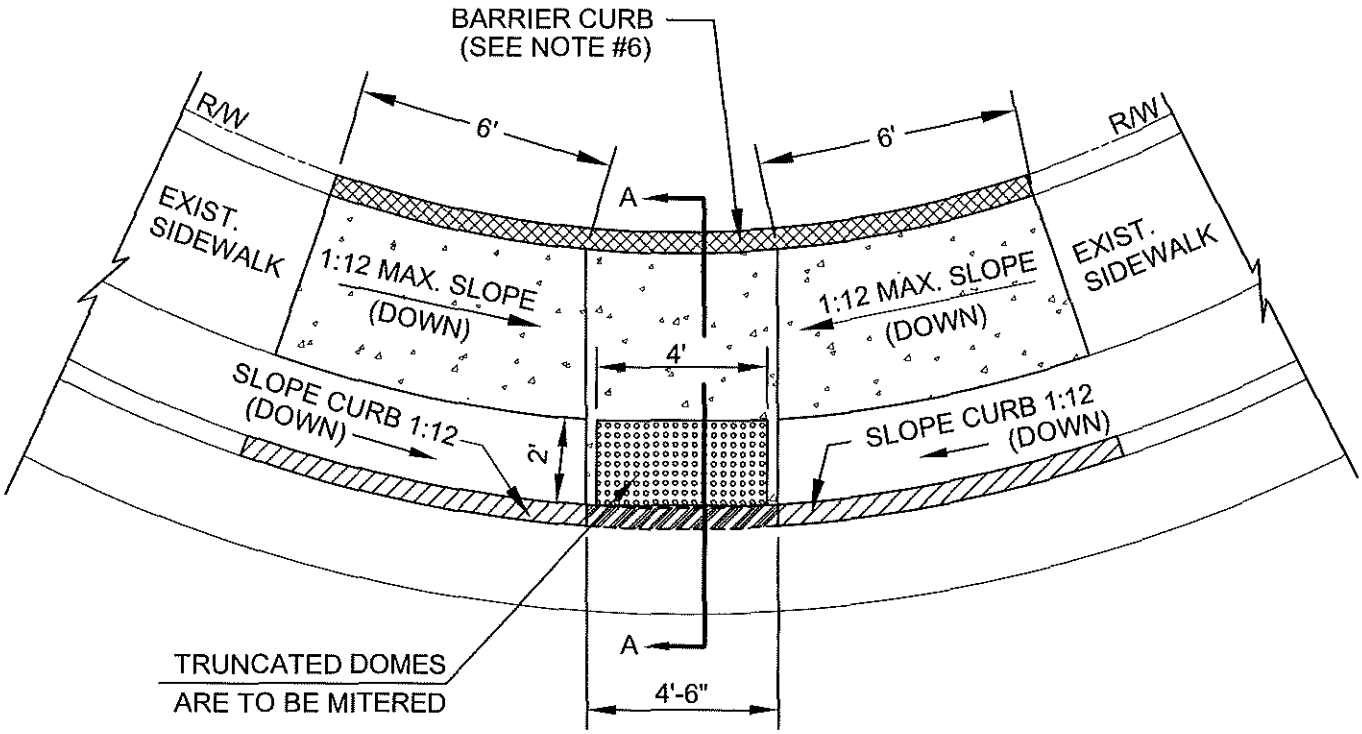

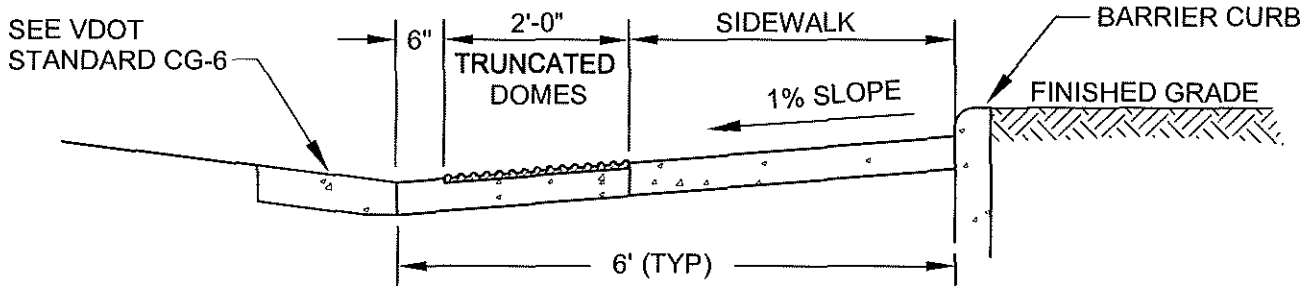

SECTION A-A
(N.T.S.)

NOTES:

1. THIS STANDARD IS COMPLIANT WITH ADA STANDARDS: 4.1.6 (1) (J) AND 4.1.6. (3) (A).
2. REFER TO VDOT IIM-LD-55.14 FOR ADA COMPLIANT GUTTER SLOPE.
3. CURB CUT RAMP TO BE CLASS A-3 CONCRETE, WITH INTEGRAL DETECTABLE WARNING SURFACE COVERING THE ENTIRE WIDTH OF THE RAMP FLOOR, DIMENSIONED AS FOUR FEET (4') WIDE, BY TWO FEET (2') IN LENGTH IN THE DIRECTION OF PEDESTRIAN TRAVEL. THE DETECTABLE WARNING SHALL BE PROVIDED BY TRUNCATED DOMES.
4. CONCRETE IS TO BE CURED WITH AASHTO APPROVED LIQUID MEMBRANE SEALANT.
5. CURB CUT RAMPS ARE TO BE ALIGNED WITH PEDESTRIAN CROSSWALKS BUT SHOULD NOT BE LOCATED BEHIND VEHICLE STOP LINES, EXISTING LIGHTPOLES, FIRE HYDRANTS, DROP INLETS, ETC.
6. TOP OF BARRIER CURB IS TO HAVE A CONSTANT ELEVATION.
7. NOT TO BE USED FOR NEW CONSTRUCTION WITHOUT THE APPROVAL OF THE DIRECTOR OF PUBLIC WORKS OR DESIGNEE.
8. ALL CONCRETE IS TO BE 3,000 P.S.I. (28 DAY) AIR ENTRAINED BROOM FINISHED.
9. REFER TO CURRENT VDOT ROAD & BRIDGE SPECIFICATIONS FOR CONCRETE POURING STANDARDS.

Sidewalk Ramp

October 2, 2009

CITY OF HAMPTON, VA. - DESIGN & CONSTRUCTION STANDARDS

CG-12MOD

Revised: Mar. 15, 2017

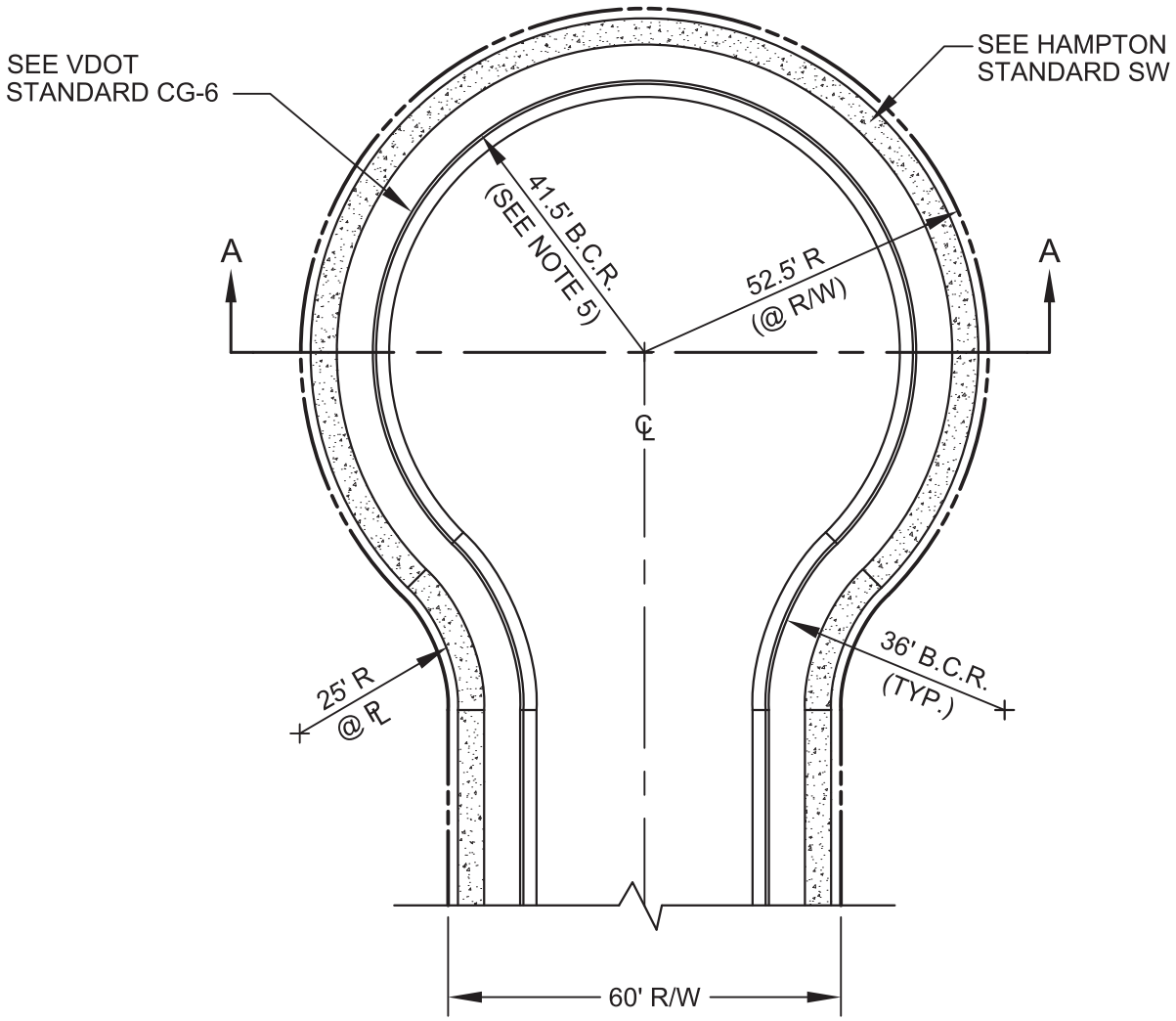

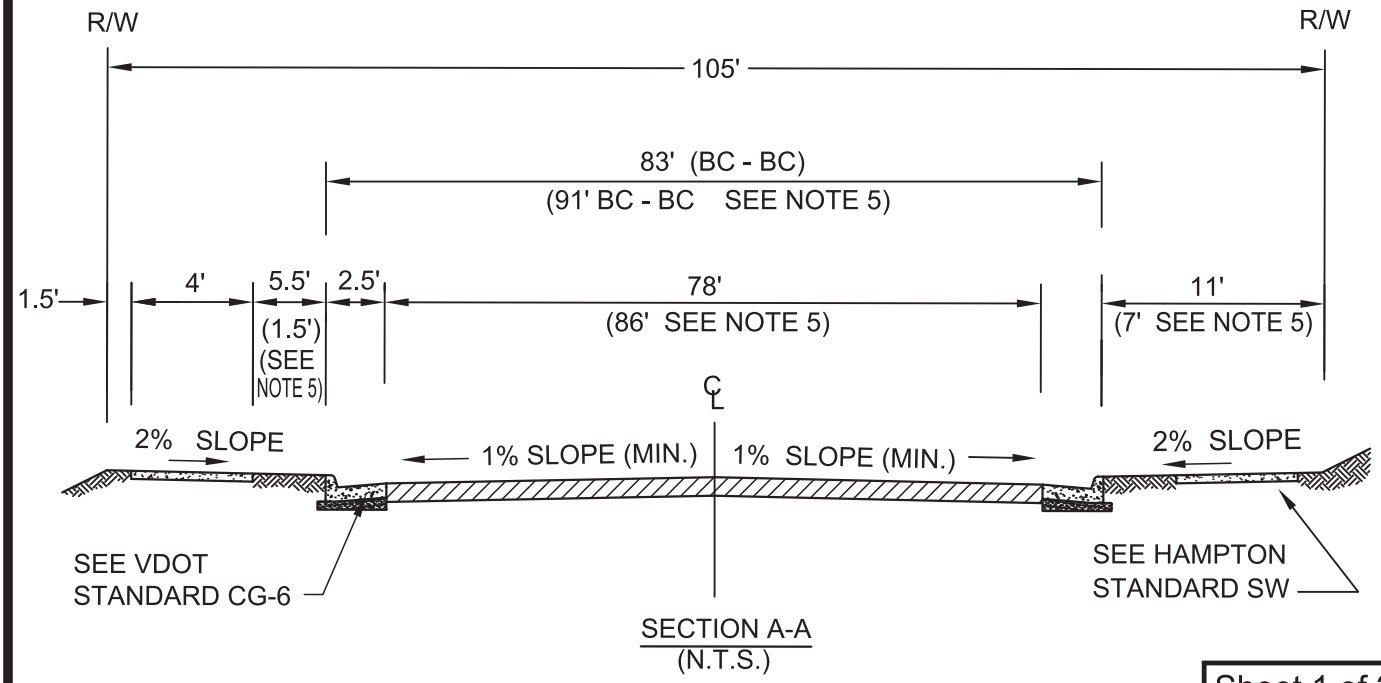

SECTION A-A
(N.T.S.)

Sheet 1 of 2

Cul-de-sac

October 2, 2009

CITY OF HAMPTON, VA. - DESIGN & CONSTRUCTION STANDARDS

CUL

Revised: June 29, 2012

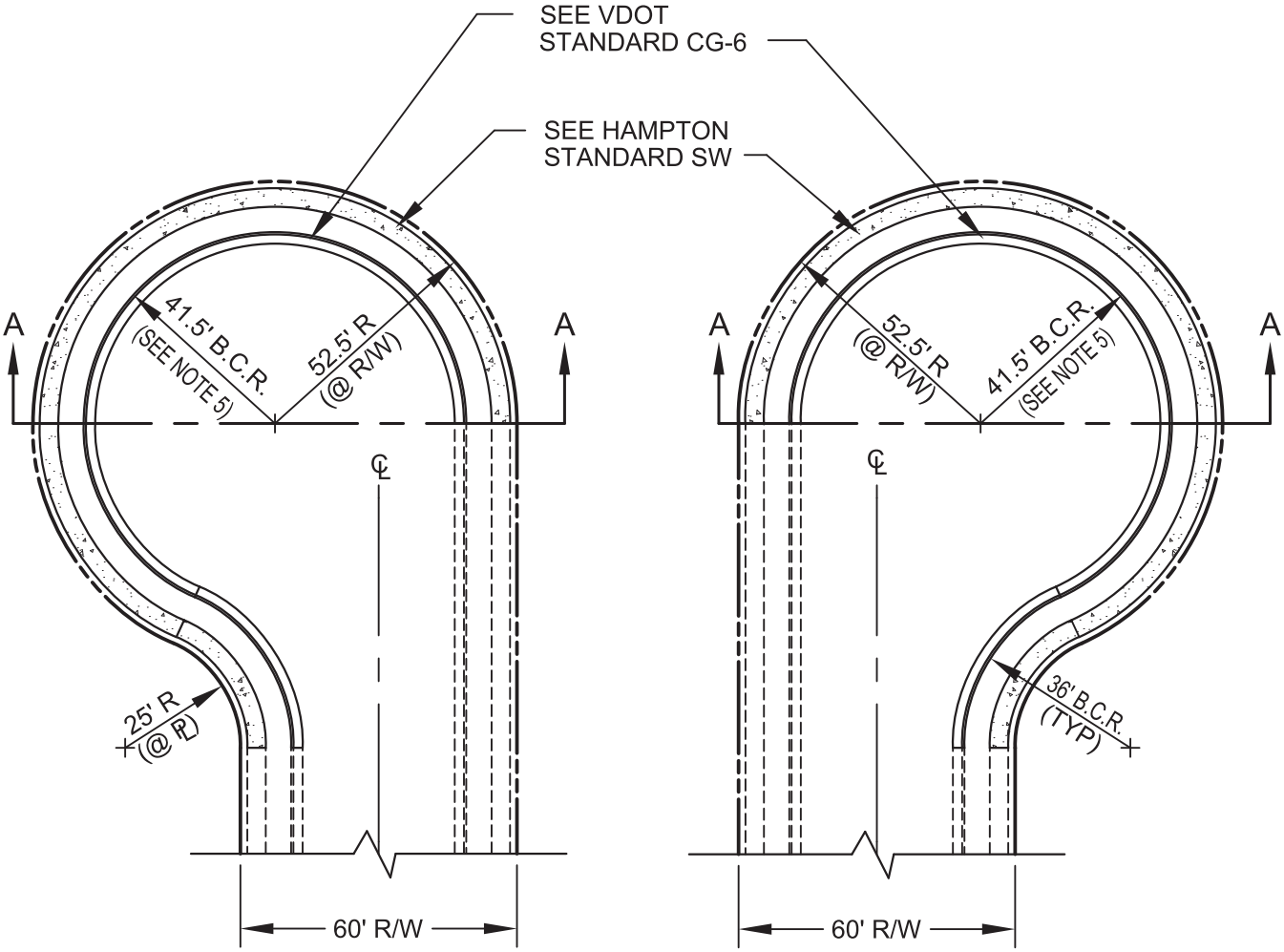

NOTES:

1. PAVEMENT DESIGN IS TO MATCH ENTRY STREET PAVEMENT DESIGN.
2. REFER TO CURRENT VDOT ROAD & BRIDGE SPECIFICATIONS FOR CONCRETE AND ASPHALT PLACEMENT.
3. CUL-DE-SAC MUST BE POSTED FOR NO PARKING.
4. MINIMUM GRADE FOR CURB & GUTTER AROUND CUL-DE-SAC WILL BE 0.50%.
5. THE CUL-DE-SAC BACK OF CURB RADIUS SHOWN AS 41.5' IS TO BE CHANGED TO 45.5' IF RESIDENTIAL STREET IS MORE THAN 0.25 MILES IN LENGTH, OR IF THE STREET SERVES MORE THAN TWENTY-FIVE RESIDENCES.

Cul-de-sac

October 2, 2009

CITY OF HAMPTON, VA. - DESIGN & CONSTRUCTION STANDARDS

CUL

Revised: June 29, 2012

FOR USE IN NON-VEHICULAR TRAFFIC AREAS

PATTERNS, STYLES AND COLORS: TO BE PROJECT BASED

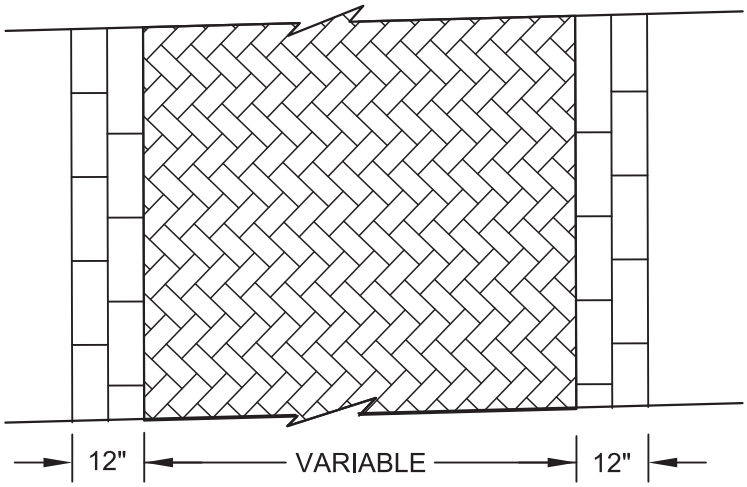

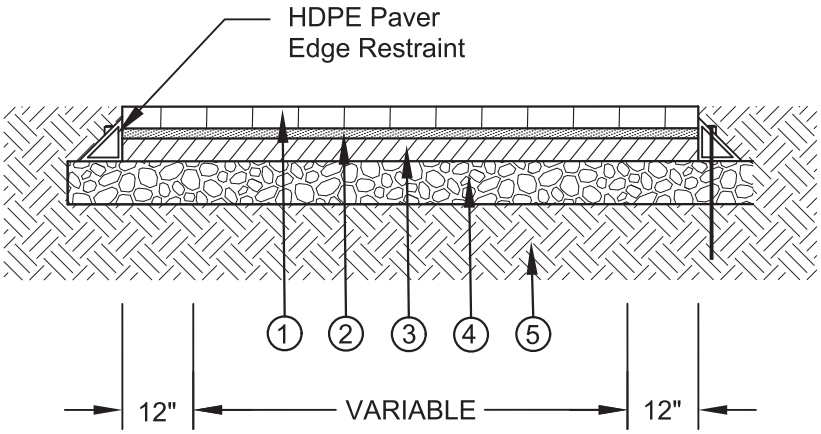

1. 3-1/8" PAVER BLOCK (DUST TOP W / SAND)
2. 1" THICK 1:10 DRY CEMENT TO SAND RATIO MIX
3. 4" 3,000 PSI CONCRETE W / FIBER
4. 6" CRUSHER RUN #21B BASE MATERIAL
5. COMPACTED SOIL SUB-GRADE (ASTM D1557 TO 95%)

NOTE:

GEOTEXTILE FABRIC IS TO BE AMOCO PROPEX 2002 OR APPROVED EQUAL.

Paver Detail - Non Vehicular

October 2, 2009

CITY OF HAMPTON, VA. - DESIGN & CONSTRUCTION STANDARDS

PAV-1

Revised: June 29, 2012

FOR USE WHERE SUBJECTED TO VEHICULAR TRAFFIC

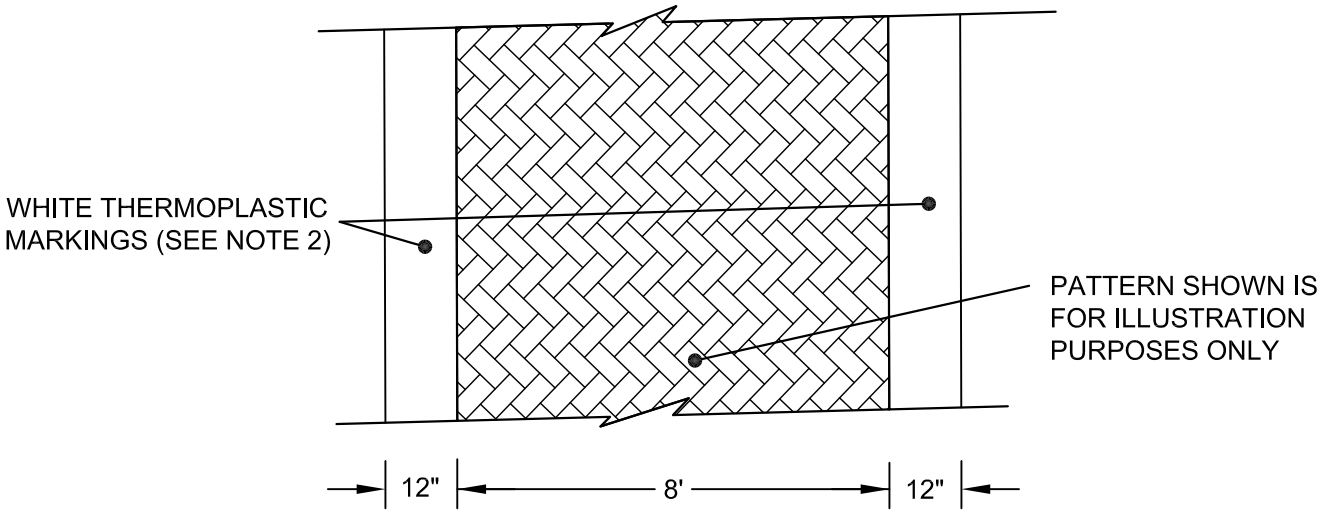

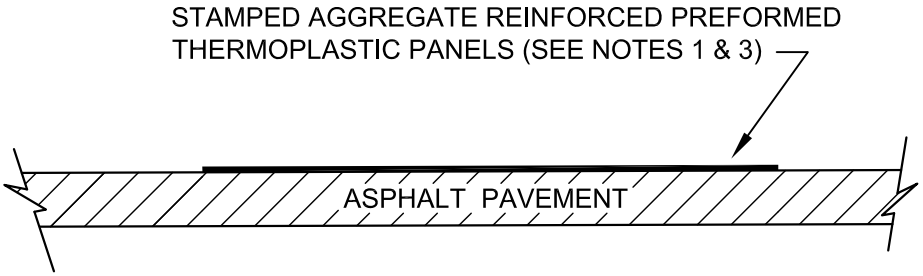

NOTES:

1. AGGREGATE REINFORCED THERMOPLATIC PANELS TO BE TRAFFICPATTERNSXD BY ENNIS-FLINT, OR APPROVED EQUAL (150 MIL MINIMUM THICKNESS).

2. TYPE B CLASS 1 WHITE 12" PAVEMENT LINE MARKINGS REQUIRED ALONG BOTH EDGES OF STAMPED AGGREGATE REINFORCED PREFORMED THERMOPLASTIC PANELS.

3. CROSSWALK DIMENSIONS, COLORS, AND STAMPED PATTERNS TO BE APPROVED BY CITY ENGINEER OR DESIGNEE.

4. IF INSTALLED ON CONCRETE PAVEMENT, PREFORMED THERMOPLASTIC PANELS TO BE TRAFFICPATTERNSGF BY ENNIS-FLINT OR APPROVED EQUAL (125 MIL MINIMUM THICKNESS).

Decorative Crosswalk Detail	December 6, 2021
CITY OF HAMPTON, VA. - DESIGN & CONSTRUCTION STANDARDS	PAV-2

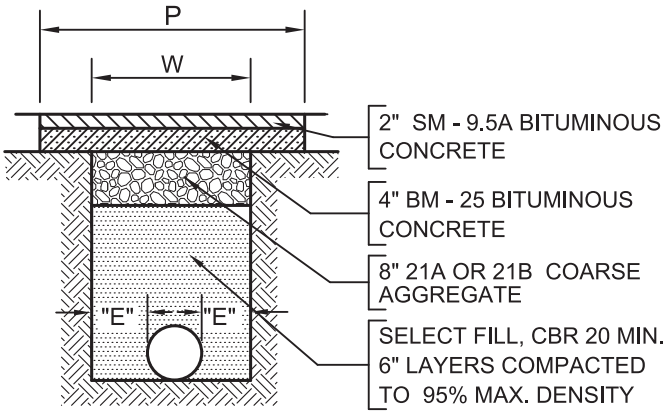

ADT LESS THAN 2,000

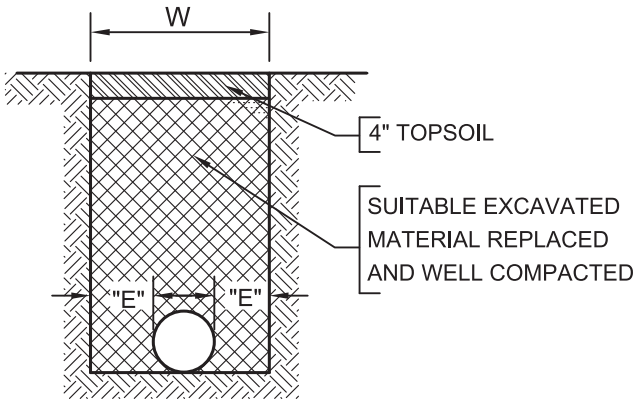

GRASS AREAS

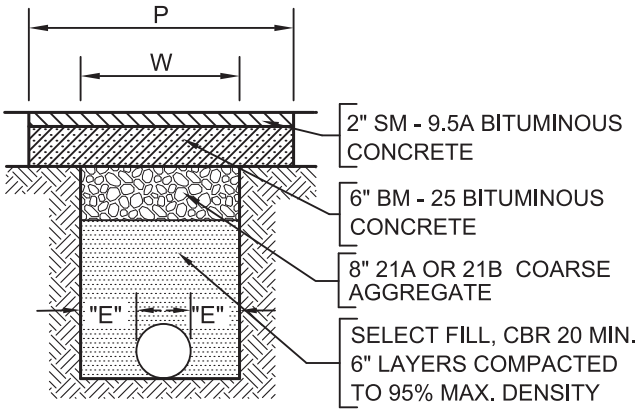

ADT 2,000 TO 10,000

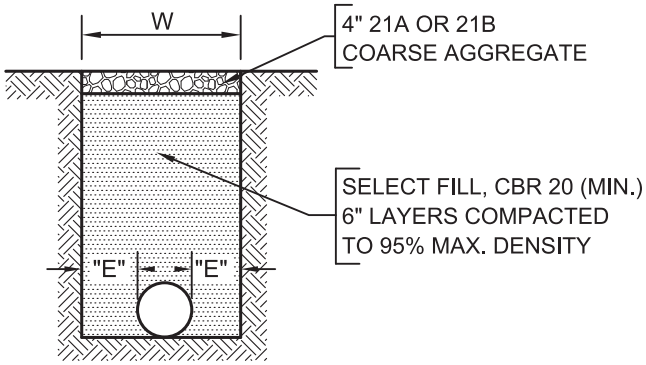

STABILIZED SHOULDERS

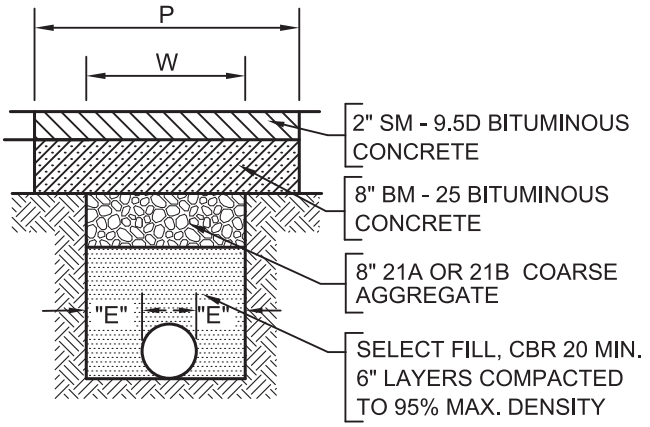

ADT GREATER THAN 10,000

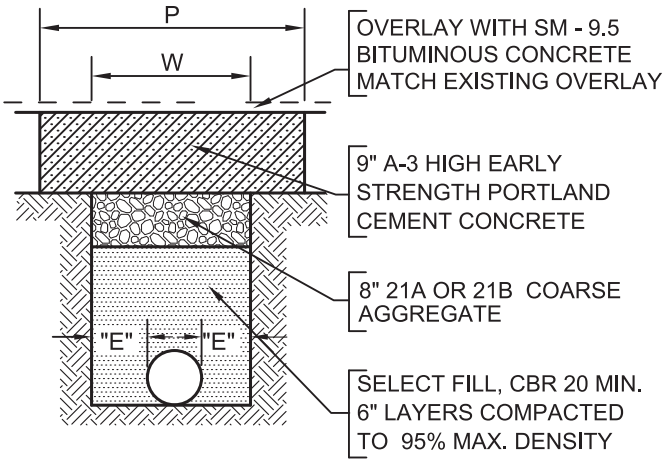

PORTLAND CEMENT CONCRETE STREETS

Sheet 1 of 3

Pavement & Site Restoration

October 2, 2009

CITY OF HAMPTON, VA - DESIGN & CONSTRUCTION STANDARDS

PC

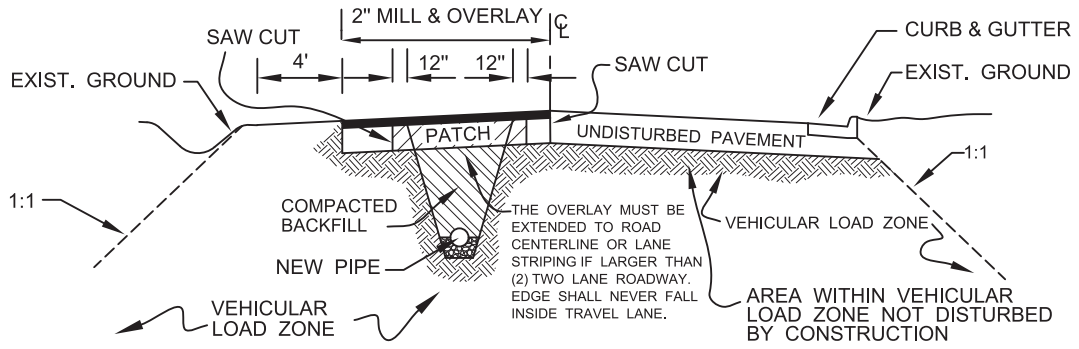

LONGITUDINAL PIPE INSTALLATION (N.T.S.)

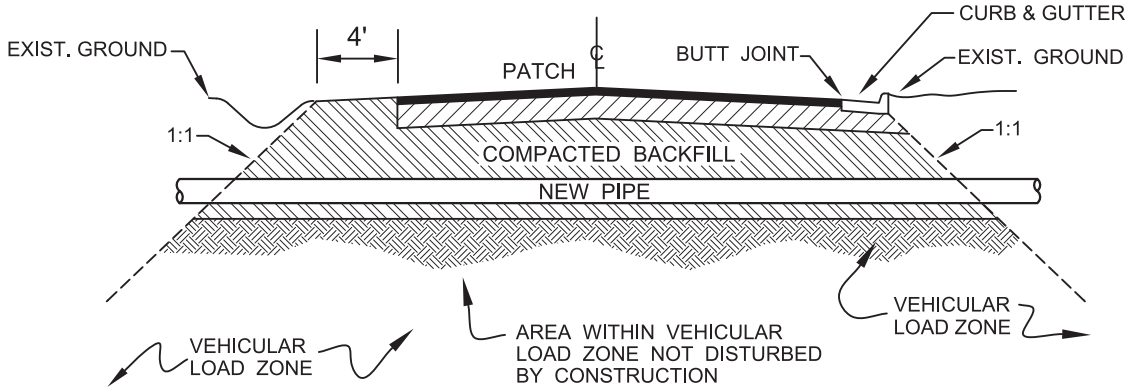

TRAVERSE PIPE INSTALLATION (N.T.S.)

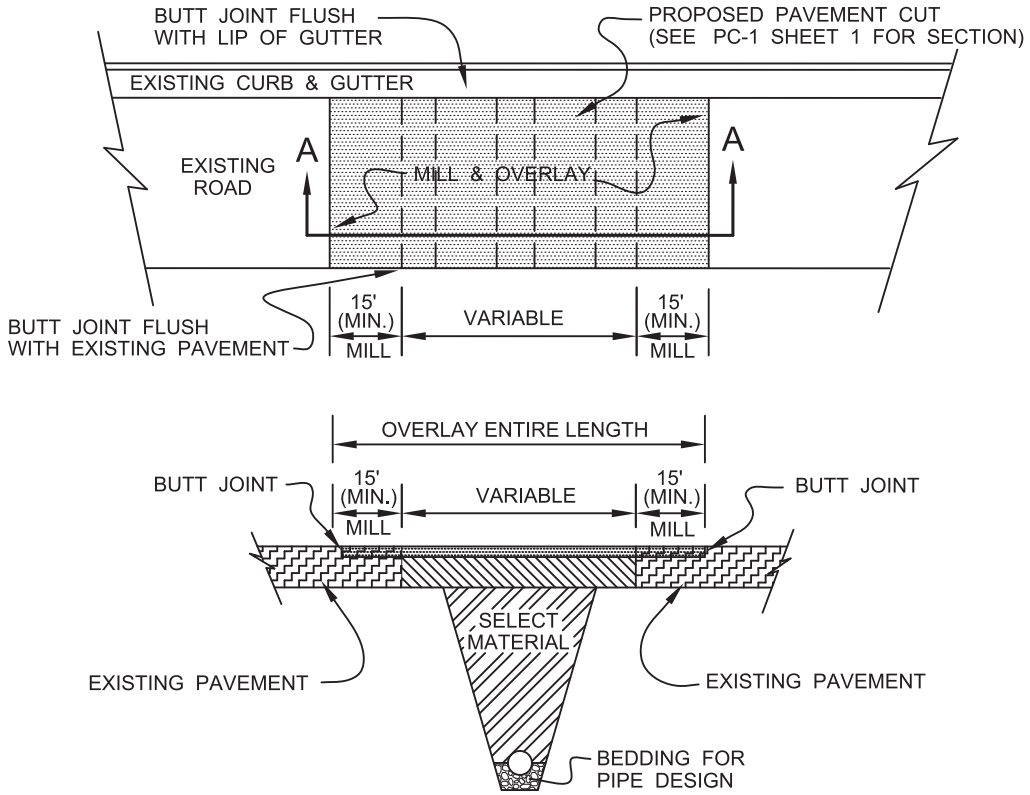

SECTION A-A (N.T.S.)

Sheet 2 of 3

Pavement & Site Restoration

October 2, 2009

CITY OF HAMPTON, VA - DESIGN & CONSTRUCTION STANDARDS

PC

NOTES FOR SHEET 1:

1. THESE DETAILS SHOW MINIMUM STANDARDS. PAVEMENT REPAIR WILL IN NO CASE RESULT IN A PAVED SECTION LESS THAN THAT REMOVED.
2. REFER TO CURRENT VDOT ROAD & BRIDGE SPECIFICATIONS FOR SELECT MATERIAL, 21A OR 21B COARSE AGGREGATE, PORTLAND CEMENT CONCRETE AND BITUMINOUS MATERIALS
3. PAVEMENT TO BE REMOVED SHALL BE SAW CUT USING APPROPRIATE EQUIPMENT TO PROVIDE A STRAIGHT NEAT EDGE.
4. ALL OTHER DISTURBED AREAS, CURBS, WALKS, ETC., SHALL BE RESTORED TO AS GOOD, OR BETTER THAN, THAT WHICH EXISTED.
5. FERTILIZER SHALL BE COMMERCIAL 10-20-10; LIME SHALL BE PULVERIZED AGRICULTURAL LIMESTONE.
6. SEED SHALL BE TALL FESCUE OR BERMUDAGRASS (SEASONALLY DEPENDENT).
7. OVERLAP EXISTING GEOTEXTILE FABRIC PATCHES 6" MIN. ON EACH SIDE OF TRENCH OPENING.
8. "E" DISTANCES:
   12" FOR 27" TO 36" PIPES
   9" FOR 6" TO 24" PIPES
   5" FOR 4" PIPES
9. MINIMUM PATCH WIDTH:
   W = NOMINAL PIPE DIA + 2E
   P = W +24"

NOTES FOR SHEET 2:

1. ALL BACKFILL LOCATED WITHIN THE VEHICULAR LOAD ZONE IS TO BE PLACED IN LIFTS NOT TO EXCEED 8" AND COMPACTED TO 95% OF THE MAXIMUM THEORETICAL DENSITY, DETERMINED IN ACCORDANCE WITH VTM-1 METHOD.
2. ALL BACKFILL OUTSIDE THE VEHICULAR LOAD ZONE BUT LOCATED IN THE RIGHT OF WAY IS TO BE COMPACTED TO 90% OF THE MAXIMUM DENSITY IN LIFTS NOT TO EXCEED 12".
3. THE LACK OF PROPER COMPACTION EQUIPMENT OR THE USE OF IMPROPER COMPACTION METHODS SHALL BE CAUSE FOR THE IMMEDIATE SHUT DOWN OF WORK BY THE DEPARTMENT OF PUBLIC WORKS.
4 DENSITY TESTS SHALL BE PERFORMED AT THE EXPENSE OF THE CONTRACTOR WHEN REQUESTED BY THE DEPARTMENT OF PUBLIC WORKS.
5. SURFACE TOLERANCES SHALL NOT EXCEED 1/4 INCH WHEN TESTED WITH A TEN FOOT STRAIGHT EDGE PLACED AT ANY TWO CONTACTS WITH THE SURFACE. ALL HUMPS OR DEPRESSIONS EXCEEDING THE SPECIFIED TOLERANCE SHALL BE CORRECTED OR THE DEFECTIVE WORK REMOVED AND REPLACED WITH NEW MATERIAL BY THE CONTRACTOR. THIS TOLERANCE SHALL BE MAINTAINED BY THE CONTRACTOR UNTIL FINAL ACCEPTANCE BY THE DEPARTMENT OF PUBLIC WORKS.
6. CONTRACTOR IS TO MAINTAIN PAVEMENT PATCH DURING THE INITIAL SETTLEMENT PHASE, WHICH SHALL BE THE FIRST 3 MONTHS AFTER CONSTRUCTION OF THE INITIAL PATCH.
7. AFTER 3 - 4 MONTHS THE CONTRACTOR SHALL MILL AND OVERLAY THE INITIAL PATCH AND THE AREA EXTENDING 15' ON BOTH SIDES OF THE PATCH. THE MILL AND OVERLAY SHALL BE A MINIMUM OF 2 INCHES. THE DIRECTOR OF PUBLIC WORKS OR HIS DESIGNEE MAY WAIVE THE REQUIREMENT TO MILL AND OVERLAY THE PATCH AND SURROUNDING AREA, IF IT IS DETERMINED THE INITIAL PATCH IS CONSISTENT WITH THE REMAINING ROADWAY.
8. THE SURFACE COURSE OVERLAY (2") SHALL RE-ESTABLISH THE ORIGINAL GRADE AND PROVIDE A SMOOTH TRANSITION WITH THE EXISTING PAVEMENT.
9. EQUIPMENT TO COMPLETE THE WORK SHALL CONSIST OF A PAVER AND ROLLER TYPICALLY USED FOR FULL LANE WIDTH PAVING.

Pavement & Site Restoration

October 2, 2009

CITY OF HAMPTON, VA - DESIGN & CONSTRUCTION STANDARDS

PC

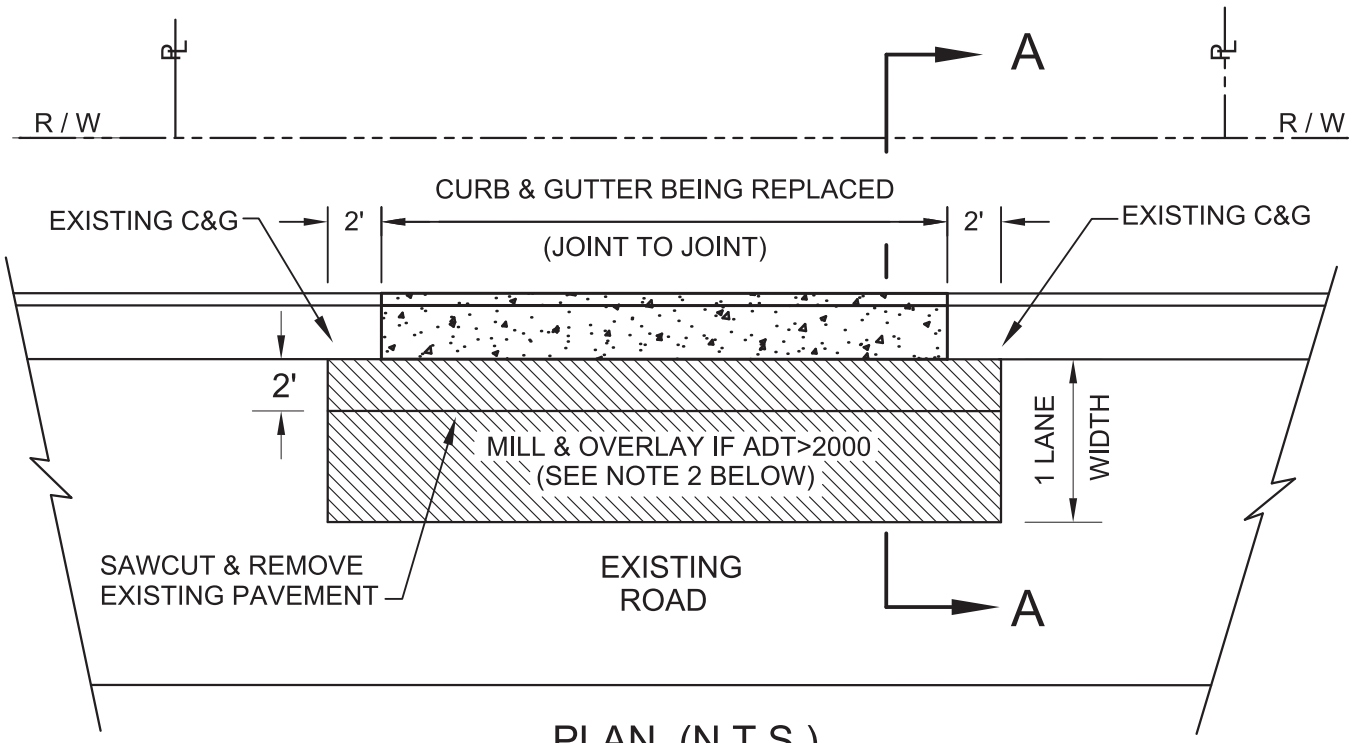

PLAN (N.T.S.)

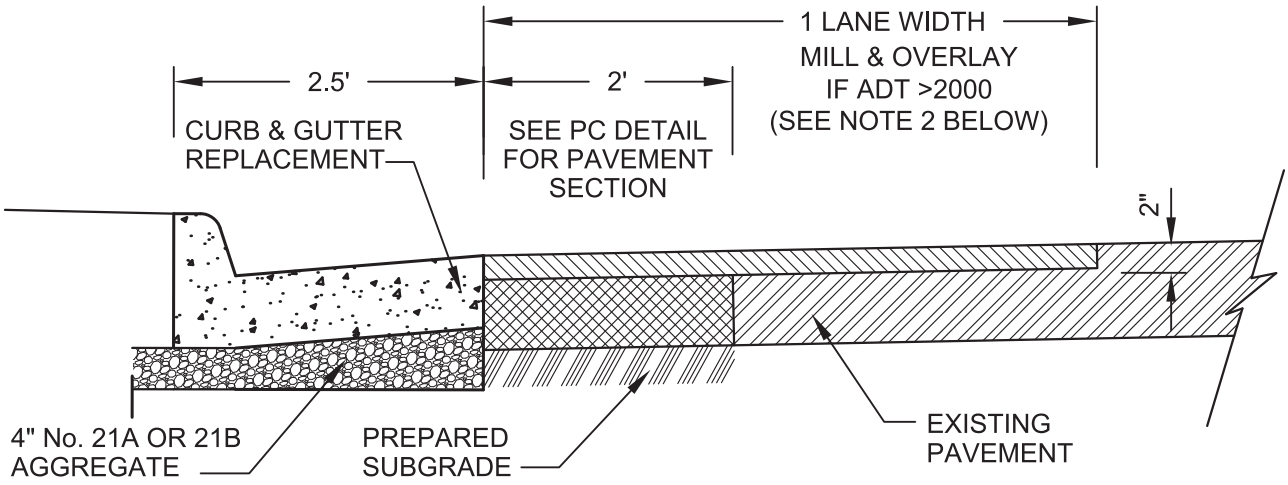

SECTION A-A (N.T.S.)

NOTES:

1. WHEN INSTALLING THE PROPOSED ENTRANCE, THE ASPHALT SHOULD NOT BE DISTURBED IF POSSIBLE. HOWEVER, IF IT BECOMES NECESSARY TO DISTURB THE EXISTING ASPHALT, THE PAVEMENT SECTION SHALL BE SAWCUT 2 FEET WIDE AND 2 FEET BEYOND BOTH SECTIONS OF THE CURB TO BE DEMOLISHED, WITHOUT IRREGULAR SHAPED EDGES, AND REMOVED. THEN THE AREA FROM WHICH THE PAVEMENT SECTION WAS REMOVED SHALL BE FILLED WITH SUBBASE (21-A), BASE MATERIAL (BM-25), AND SURFACE MATERIAL (SM-9.5A) BASED ON THE ADT AS PER HAMPTON STANDARD PC.

2. THE DIRECTOR OF PUBLIC WORKS OR DESIGNEE MAY WAIVE THE REQUIREMENT FOR MILL & OVERLAY FOR RESIDENTIAL USES.

Curb & Gutter Replacement

June 29, 2012

CITY OF HAMPTON, VA - DESIGN & CONSTRUCTION STANDARDS

PC-1

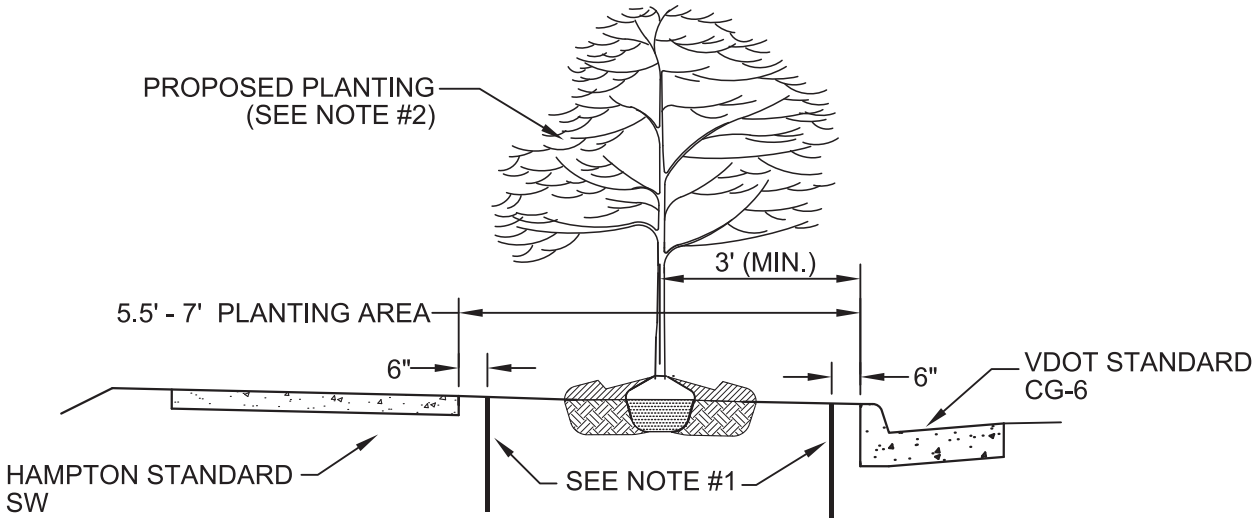

SECTION A-A
(N.T.S.)

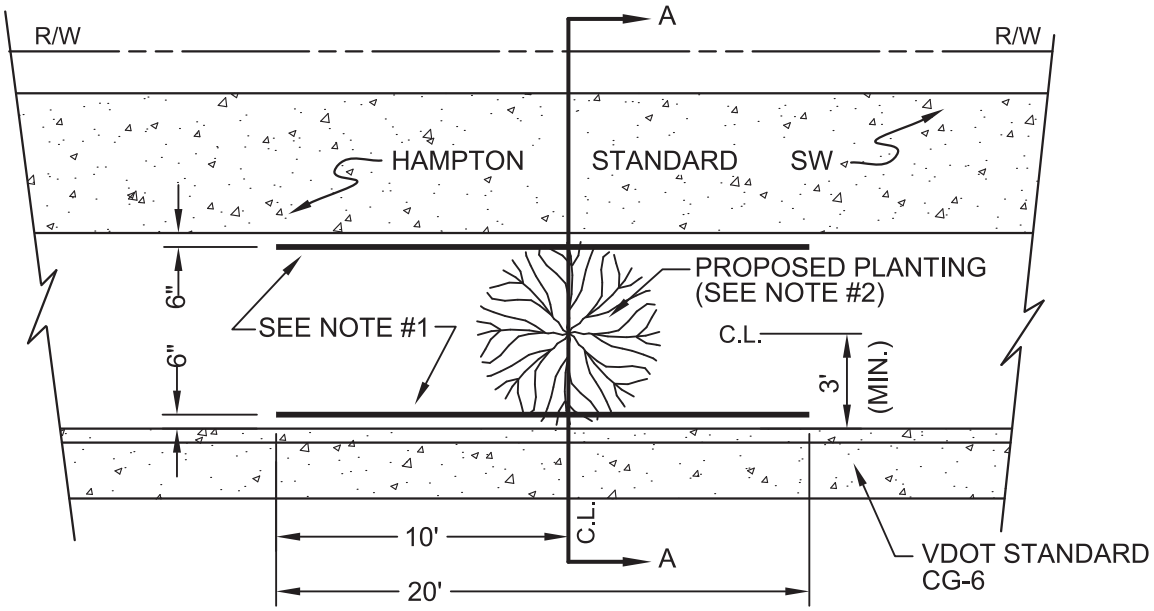

PLAN VIEW
(N.T.S.)

NOTES:

1. INSTALL CENTURY ROOT BARRIER, OR APPROVED EQUAL, 24" IN DEPTH AND A MINIMUM OF 20' IN LENGTH (10' EITHER SIDE OF PLANTING) ADJACENT TO CONCRETE OR ASPHALT.
2. FOR A LIST OF APPROPRIATE TREES WHICH MAY BE PLANTED WITHIN THE PUBLIC RIGHT-OF-WAY, REFERENCE THE DOCUMENT ENTITLED "ACCEPTABLE RIGHT OF WAY PLANTINGS", MAINTAINED BY THE DEPARTMENT OF PUBLIC WORKS IN CONSULTATION WITH THE COMMUNITY DEVELOPMENT DEPARTMENT AND THE DEPARTMENT OF PARKS & RECREATION.
3. IF PLANTINGS ARE AT AN INTERSECTION, REFER TO AASHTO (DESIGN OF HIGHWAYS AND STREETS - GREEN BOOK), "INTERSECTION SITE DISTANCE", CHAPTER 9.
4. REFER TO REGIONAL STANDARDS FOR PLANTING AND STAKING DETAILS.
5. FOR PLANTING AREAS WIDER THAN 7', AFTER REVIEW OF THE LANDSCAPE PLAN, PUBLIC WORKS MAY WAIVE THE ROOT BARRIER REQUIREMENTS.
6. MINIMUM DISTANCE BETWEEN TREES, MEASURED PARALLEL TO THE CURB, IS TO BE 100'.
7. PLANTING AREAS LESS THAN 50 SQ. FT. ARE TO BE LEFT AS TURF AREAS ONLY.

Right-of-Way Planting Location

October 2, 2009

CITY OF HAMPTON - DESIGN & CONSTRUCTION STANDARDS

RWPL

June 29, 2012

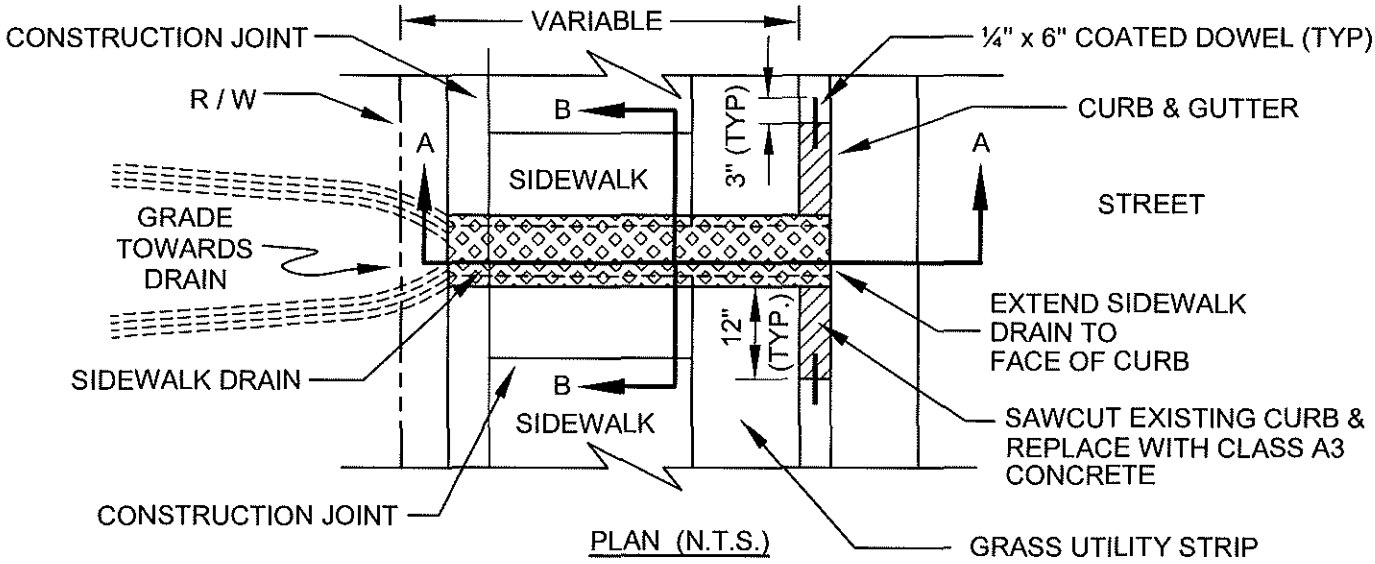

PLAN (N.T.S.)

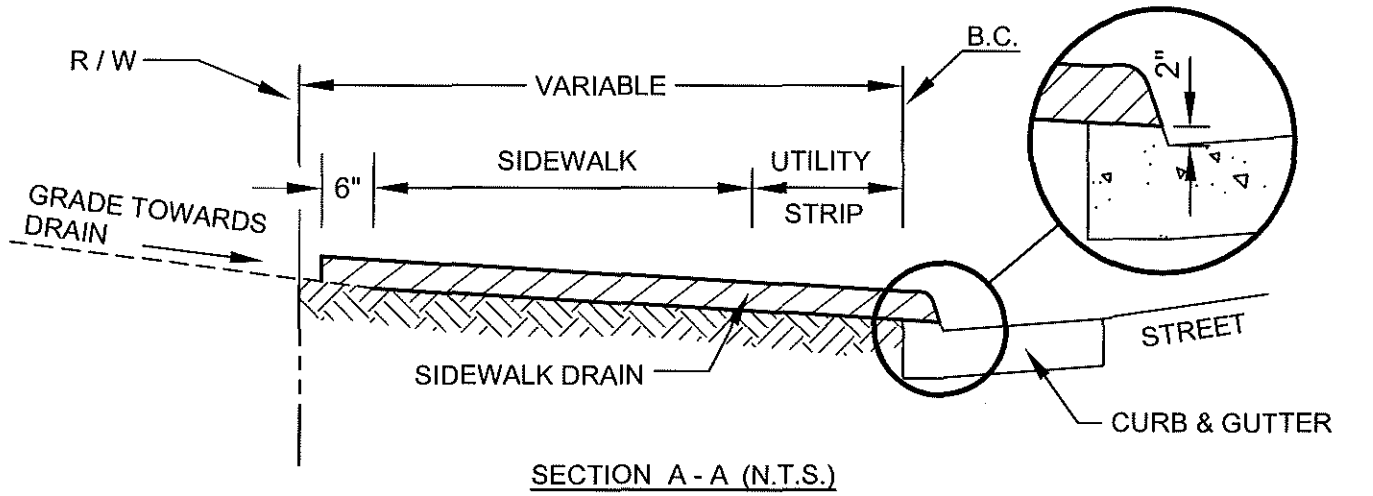

SECTION A - A (N.T.S.)

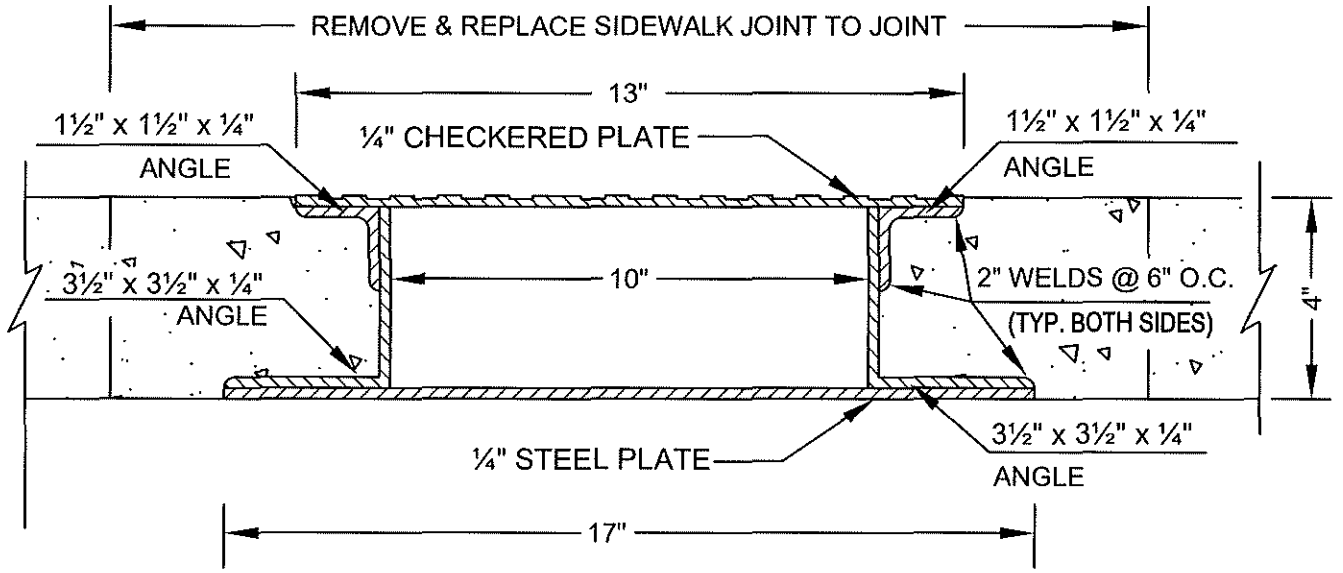

SECTION B - B (N.T.S.)

Sidewalk Drain

June 29, 2012

CITY OF HAMPTON, VA. - DESIGN & CONSTRUCTION STANDARDS

SD

Revised: Mar. 15, 2017

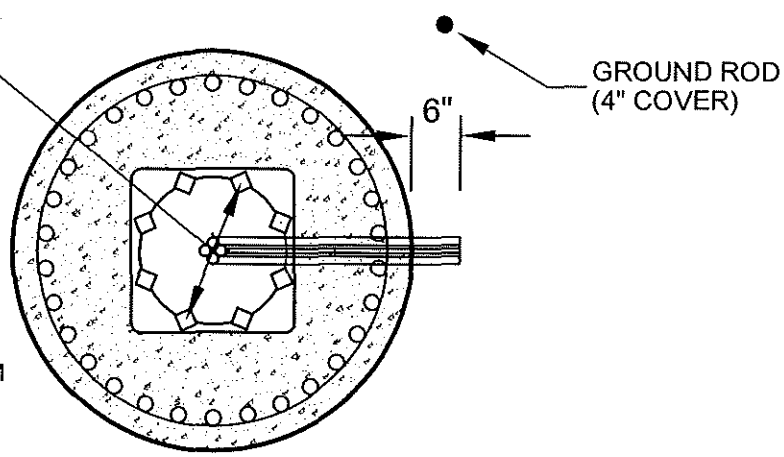

BOLT PROJECTION AS REQUIRED BY FOUNDATION ENGINEER, HOWEVER, THE DISTANCE BETWEEN THE BOTTOM OF THE BASE PLATE AND THE TOP OF PEDESTAL SHALL BE LESS THAN, OR EQUAL TO, TWICE THE DIAMETER OF THE ANCHOR BOLTS BUT SHALL BE GREATER THAN 3"

TOP VIEW

(N.T.S.)

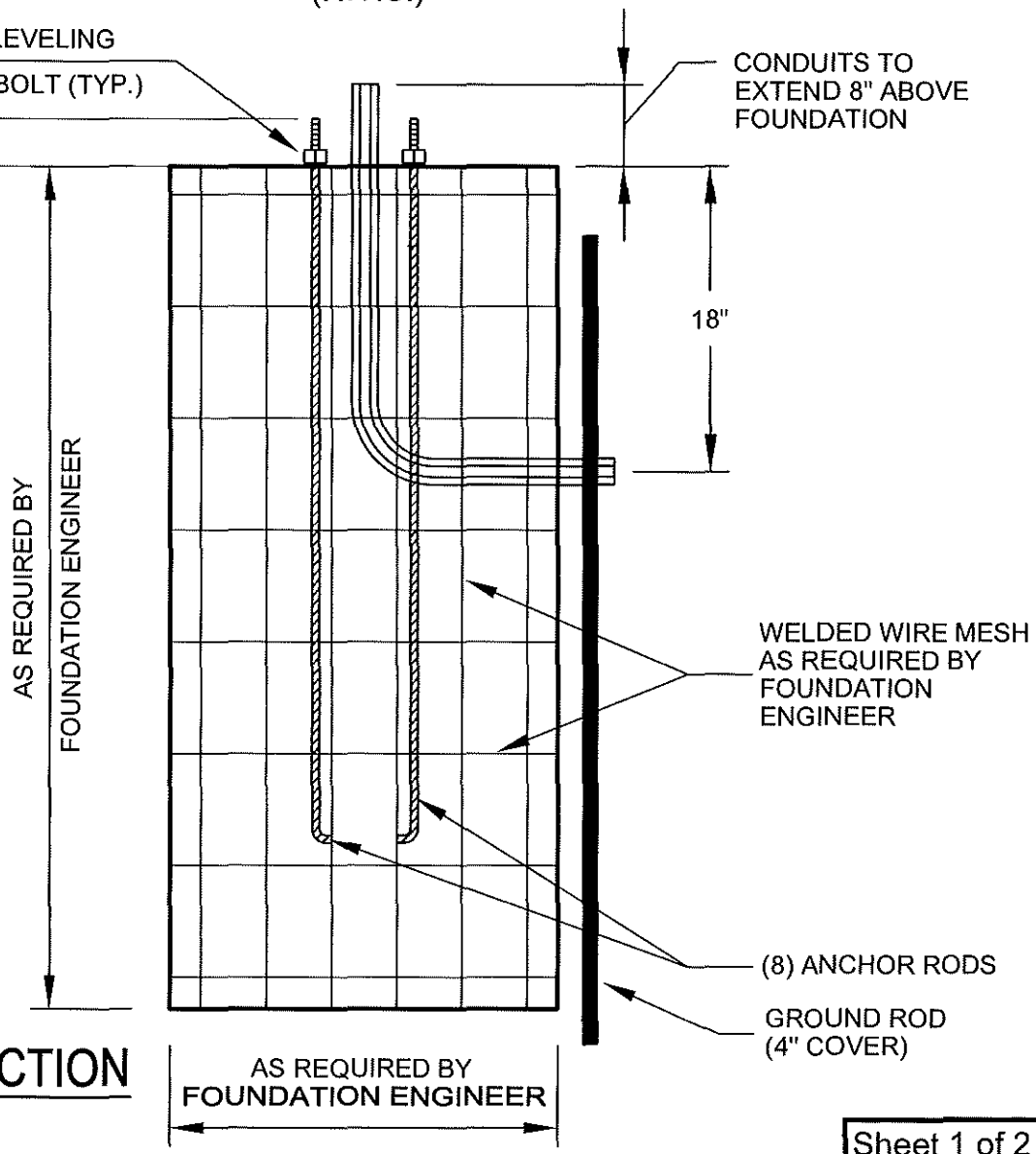

CIRCULAR SECTION

(N.T.S.)

Sheet 1 of 2

Signal Pole Foundation

October 10, 2012

CITY OF HAMPTON, VA. - DESIGN & CONSTRUCTION STANDARDS

SPF

Revised: Aug, 22, 2019

NOTES:

1. ANCHOR BOLTS AND BOLT PATTERN SHALL BE FURNISHED WITH POLE. POLE SHALL BE CENTERED ON THE FOUNDATION.

2. EACH FOUNDATIONSHALL BE PERMANENTLY MARKED TO INDICATE ALL SIDES FROM WHICH CONDUITS PASS. THIS MARK SHALL BE MADE WITH A TROWEL WHEN FINISIHING THE CONCRETE AND SHALL BE 1/4" DEEP AND 4" TO 6" LONG. LOCATIONS OF EMPTY CONDUITS SHALL HAVE AN ADDITIONAL 2" LONG MARK MADE PERPENDICULAR TO, AND CENTERED ON, THIS MARKING.

3. WHEN THE FOUNDATION EXTENDS 4" ABOVE FINISHED GRADE ALL EDGES SHALL BE CHAMFERED 3/4".

4. GROUNDING BUSHINGS SHALL BE INSTALLED ON EACH END OF METAL CONDUITS. EMPTY CONDUITS SHALL BE PLUGGED TO PREVENT MOISTURE AND RODENT ENTRY.

5. BELL ENDS SHALL BE INSTALLED ON EACH END OF PVC CONDUITS. EMPTY CONDUITS SHALL BE PLUGGED TO PREVENT MOISTURE AND RODENT ENTRY.

6. VOIDS REMAINING AFTER CONDUCTORS EXIT OR ENTER BELL ENDS OR BUSHINGS OF CONDUITS, SHALL BE PLUGGED TO PREVENT MOISTURE AND RODENT ENTRY.

7. NO MORTAR, GROUT, OR CONCRETE SHALLBE PLACED BETWEEN THE BOTTOM OF BASE PLATE AND TOP OF PEDESTAL.

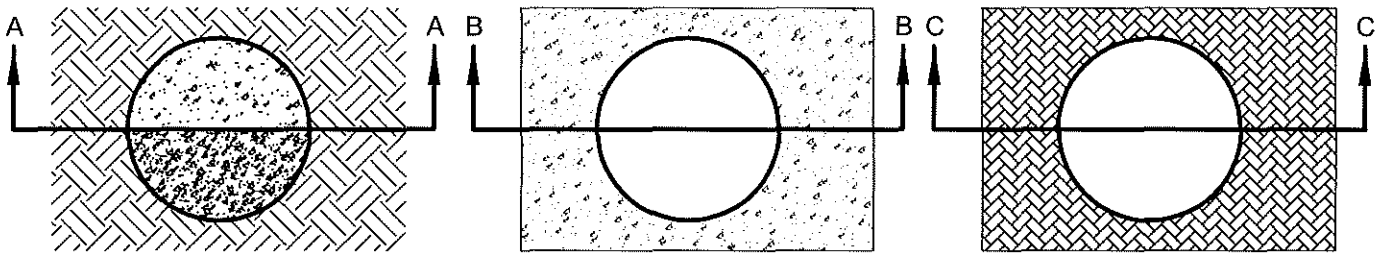

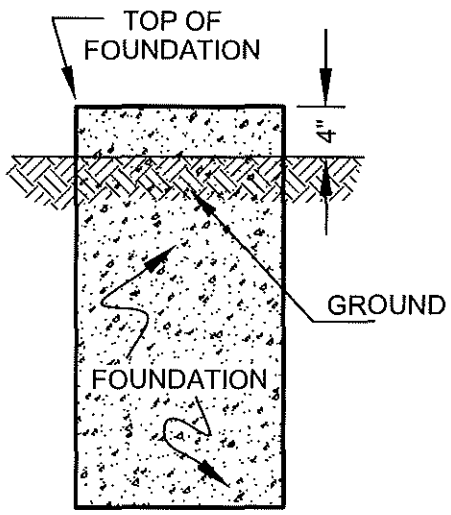

SECTION A-A
(N.T.S.)
FOUNDATION PLACED IN GROUND

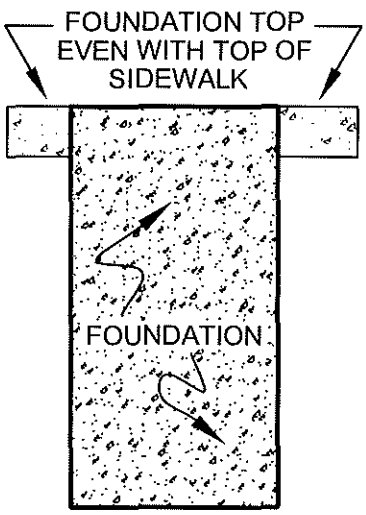

SECTION B-B
(N.T.S.)
FOUNDATION PLACED IN CONCRETE SIDEWALK

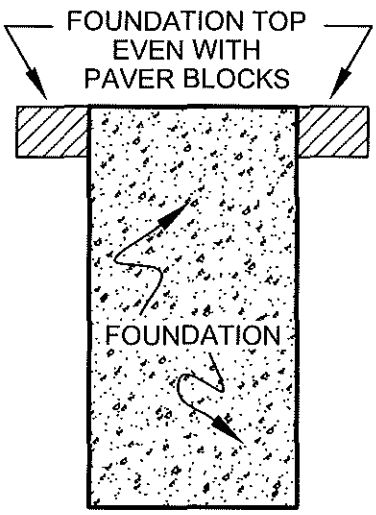

SECTION C-C
(N.T.S.)
FOUNDATION PLACED IN BRICK PAVERS

Signal Pole Foundation

October 10, 2012

CITY OF HAMPTON, VA. - DESIGN & CONSTRUCTION STANDARDS

SPF

Revised: Aug. 22, 2019

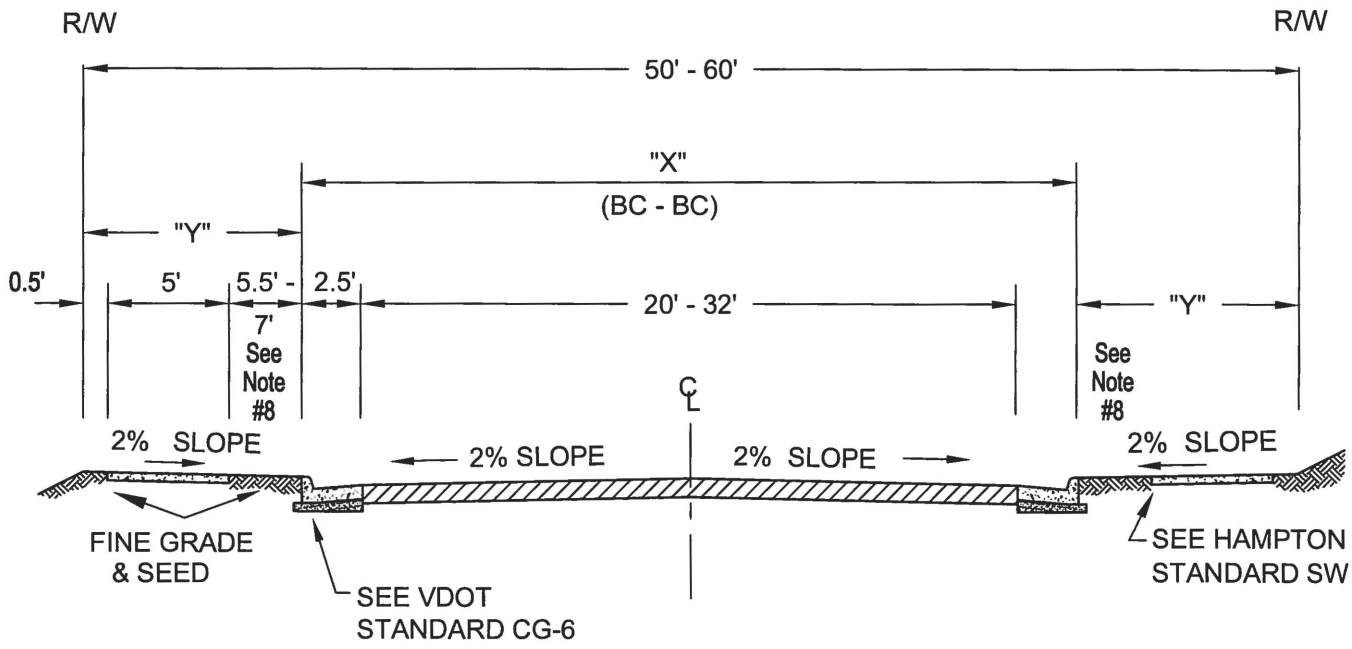

50' - 60' R/W SCHEDULE

R/W WIDTH	"X"	"Y"	STREET PARKING	REMARKS
50'	25'	12.5'	NONE	**SEE NOTE 4**
50'	27'	11.5'	1 SIDE	**SEE NOTE 4**
55'	33'	11'	2 SIDES	STANDARD
60'	37'	11.5'	2 SIDES	

NOTES:

1. MINIMUM ACCEPTABLE PAVEMENT DESIGN TO BE PER CURRENT VDOT STANDARDS, BUT NOT LESS THAN:
   2" SM-9.5A BITUMINOUS CONCRETE
   2.5" BM-25 BITUMINOUS CONCRETE
   8" 21A OR 21B COARSE AGGREGATE
   COMPACTED SUBGRADE TO 95%.
2. EXCEPTIONS TO PAVEMENT DESIGN TO BE BASED UPON PROJECTED AVERAGE DAILY TRAFFIC (ADT) AND EXISTING SOIL CONDITIONS (CBR / SSV) AND APPROVED BY THE DIRECTOR OF PUBLIC WORKS OR DESIGNEE.
3. MUST MEET VDOT GEOMETRIC DESIGN STANDARDS FOR RESIDENTIAL SUBDIVISION STREETS TABLE 1 - CURB AND GUTTER SECTION, FROM APPENDIX B(1) SUBDIVISION STREET DESIGN GUIDE.
4. ANY RESTRICTIONS TO ON-STREET PARKING REQUIRES APPROVAL FROM THE DIRECTOR OF PUBLIC WORKS.
5. STREETS TO BE POSTED FOR NO PARKING SHALL MEET CURRENT VDOT STANDARDS.
6. MINIMUM CROSS SECTION FOR STREETS WITH SINGLE POINTS OF ENTRY TO BE 60' R/W.
7. REFER TO CURRENT VDOT ROAD & BRIDGE SPECIFICATIONS FOR CONCRETE AND ASPHALT PLACEMENT.
8. GRASS AREA (VERGE) IS TO BE GRADED TOWARDS CURB & GUTTER AT A 2% - 4% SLOPE.

Residential Street Section

October 2, 2009

CITY OF HAMPTON, VA - DESIGN & CONSTRUCTION STANDARDS

ST-RES

Revised: June 26, 2019

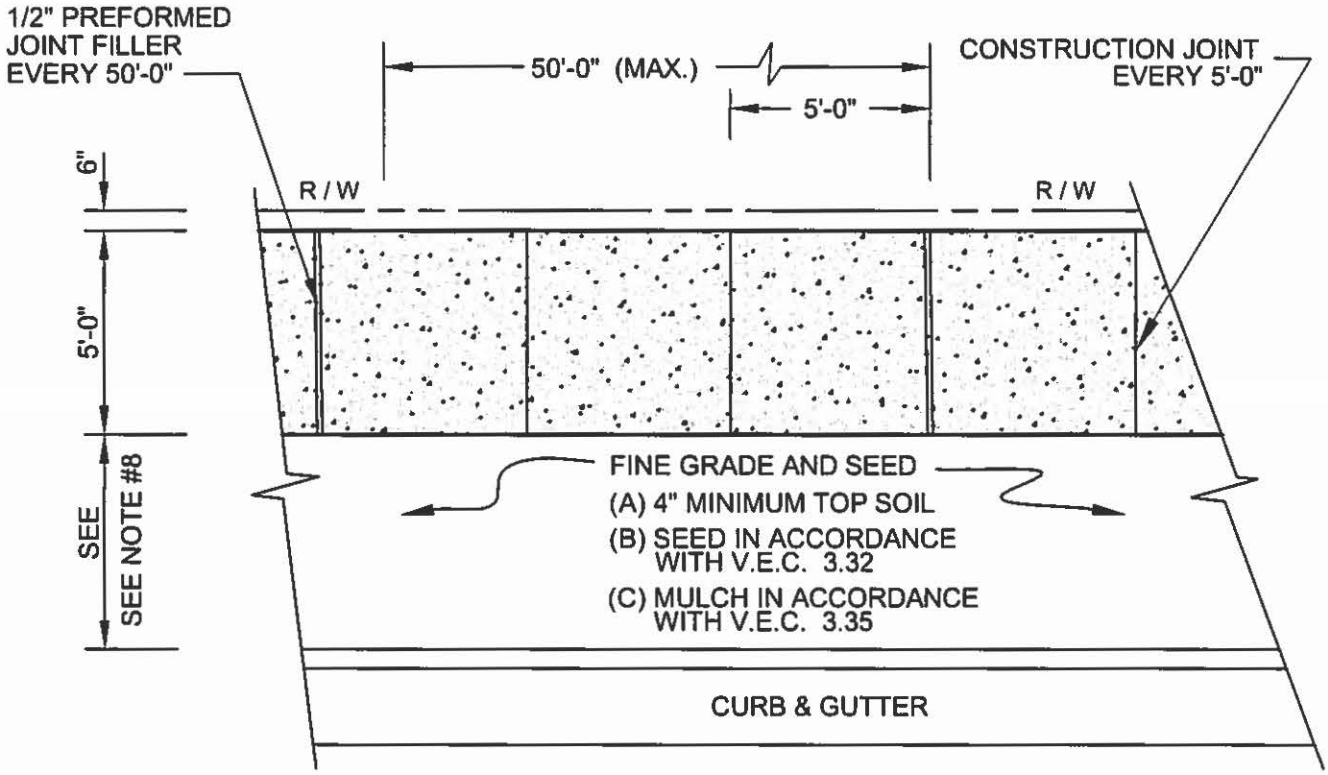

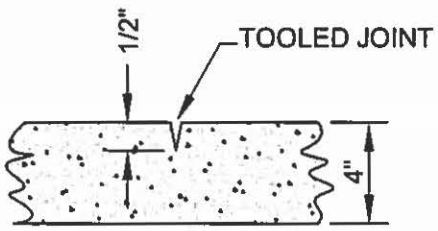

CONSTRUCTION JOINT
(DETAIL - N.T.S.)

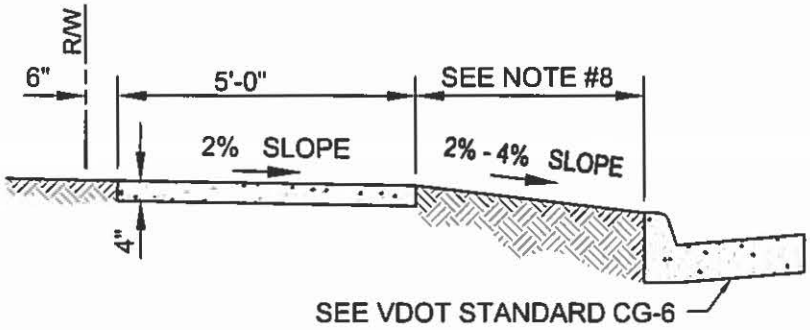

TYPICAL CROSS SECTION
(DETAIL - N.T.S.)

NOTES:

1. THIS STANDARD IS INTENDED FOR NEW CONSTRUCTION WORK ONLY, AND NOT FOR REPAIRS OR REPLACEMENT OF EXISTING SIDEWALK.
2. ALL SIDEWALK REPLACEMENT SHALL BE JOINT TO JOINT.
3. SUB-GRADE - STABILIZE WITH SELECT FILL OR CRUSHER RUN STONE.
4. PREFORMED JOINT FILLER SHALL BE ½" IN THICKNESS AND SHALL HAVE A WIDTH AND DEPTH EQUAL TO THOSE OF THE INCIDENTAL STRUCTURE. IT SHALL BE PLACED EVERY 50' AND WHERE A CONCRETE SIDEWALK INTERSECTS WITH A CONCRETE VEHICULAR ENTRANCE.
5. ALL CONCRETE IS TO BE CLASS A3 3,000 P.S.I.,(28 DAY) AIR ENTRAINED BROOM FINISHED.
6. CONCRETE CURING MATERIAL SHALL BE APPLIED TO MAINTAIN THE HUMIDITY AND TEMPERATURE OF FRESHLY PLACED CONCRETE TO ENSURE SATISFACTORY HYDRATION AND PROPER HARDENING OF THE CONCRETE. THIS CURING MATERIAL SHALL MEET THE REQUIREMENTS OF THE LATEST EDITION OF THE VDOR ROAD AND SPECIFICATION, SECTION 220.
7. REFER TO CURRENT VDOT ROAD & BRIDGE SPECIFICATIONS FOR CONCRETE POURING STANDARDS.

Sidewalk

October 2, 2009

CITY OF HAMPTON, VA. - DESIGN & CONSTRUCTION STANDARDS

SW

Revised: August 2, 2019

NOTES CONT'D:

8. SIDEWALKS TO MEET ADA REQUIREMENTS.
9. MATCH EXISTING DISTANCE IN ESTABLISHED AREAS. SEE HAMPTON STANDARD ST-RES STREET SECTION FOR DISTANCE IN NEW CONSTRUCTION.

Sidewalk

October 2, 2009

CITY OF HAMPTON, VA. - DESIGN & CONSTRUCTION STANDARDS

SW

Revised: August 2, 2019

FOR USE ON STREETS DEVELOPED PRIOR TO 2010

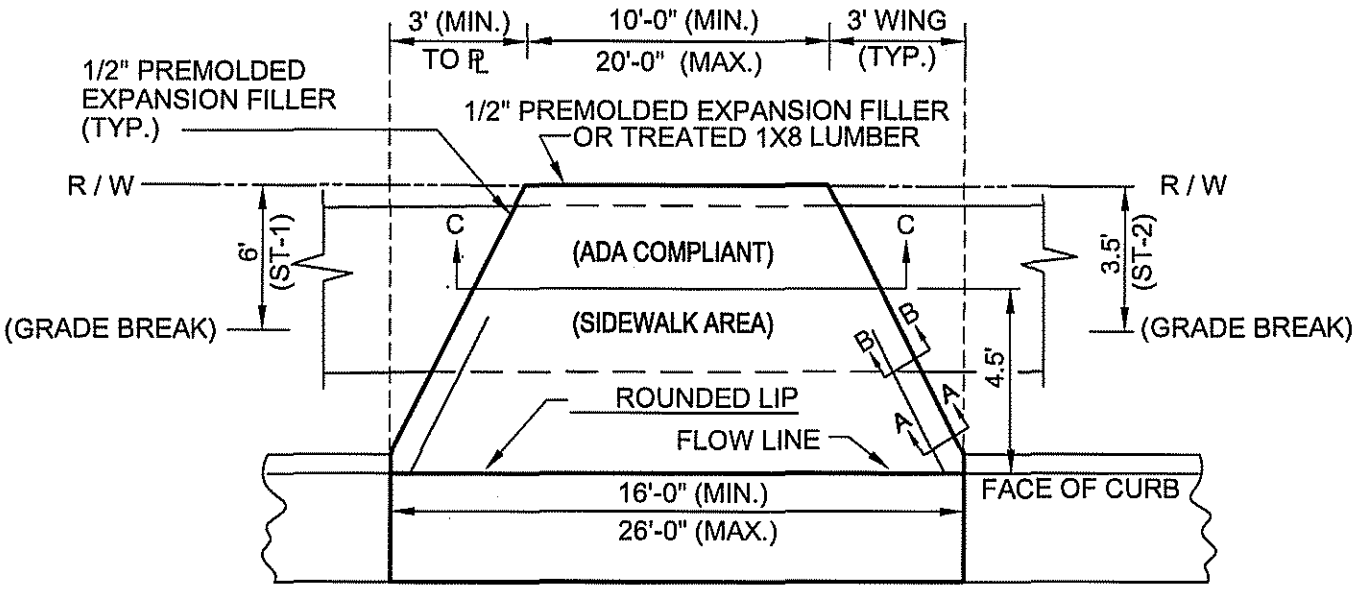

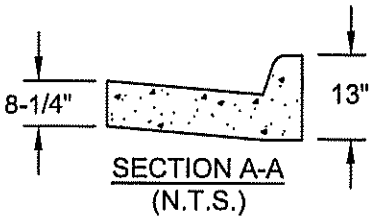

SECTION A-A
(N.T.S.)

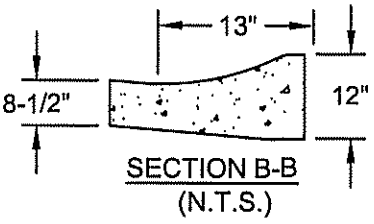

SECTION B-B
(N.T.S.)

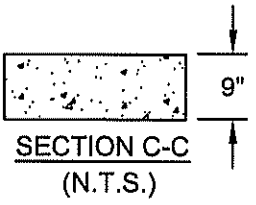

SECTION C-C
(N.T.S.)

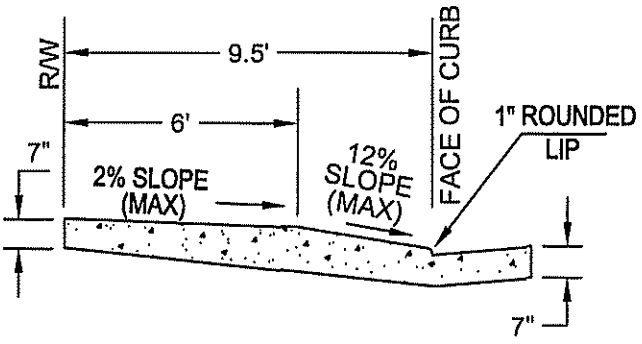

SECTION FOR ST-1 STREETS
(32' BC TO BC)
(N.T.S.)

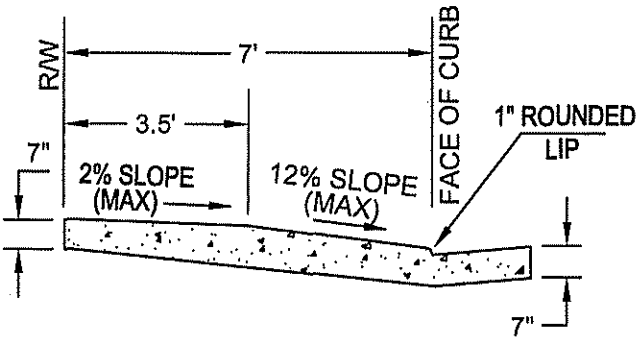

SECTION FOR ST-2 STREETS
(37' BC TO BC)
(N.T.S.)

Sheet 1 of 2

Residential Driveway Entrance

October 2, 2009

CITY OF HAMPTON - DESIGN & CONSTRUCTION STANDARDS

VE - 1

Revised: October 10, 2016

NOTES:

1. ALL CONCRETE IS TO BE 3,000 P.S.I. (28 DAY) AIR ENTRAINED BROOM FINISHED. EXPOSED AGGREGATE, BRICKS OR PAVER BLOCKS MAY BE USED AS AN ALTERNATE. HOWEVER, IF THE ENTRANCE IS REPLACED BY THE CITY OF HAMPTON, ONLY BROOM FINISHED CONCRETE WILL BE USED.
2. CONCRETE IS TO BE CURED WITH AASHTO APPROVED LIQUID MEMBRANE SEALANT.
3. COMPACTED SUB-BASE IS TO BE APPROVED BY INSPECTOR.
4. BRICK OR PAVER BLOCK ENTRANCES MUST BE CONSTRUCTED TO THE CITY OF HAMPTON PAV-1 OR PAV - 2 CROSS SECTION.
5. WHERE CONCRETE HAS BEEN REMOVED, NEW SIDEWALK IS TO BE FORMED AND POURED ALONG WITH THE ENTRANCE. SIDEWALK IS TO BE REMOVED, AND REPLACED, BACK TO THE NEXT CONSTRUCTION JOINT.
6. NO WATER METERS / VALVES OR GAS VALVES ARE ALLOWED IN ENTRANCE. CONTACT NNWW FOR RELOCATION.
7. NO SANITARY SEWER CLEANOUTS ARE ALLOWED IN ENTRANCE. CONTACT WASTEWATER FOR SANITARY CLEANOUTS IN REPLACEMENT ENTRANCES,
8. IF THE EXISTING C & G JOINT IS WITHIN 5' (FIVE FEET) OF ENTRANCE, REMOVE AND REPLACE C & G TO THAT JOINT.
9. REFER TO CURRENT VDOT ROAD & BRIDGE SPECIFICATIONS FOR CONCRETE POURING STANDARDS.
10. MONOLITHIC POUR OF DRIVEWAY AND CURB & GUTTER IS REQUIRED FOR INITIAL INSTALLATIONS (NEW SUBDIVISION, STREET RE-CONSTRUCTIONS AND FIRST TIME DRIVEWAYS WHERE EXISTING CURB AND GUTTER EXISTS). REPLACEMENT OF EXISTING DRIVEWAYS WILL BE BASED UPON THE CONDITION OF THE CURB AND GUTTER AS DETERMINED BY THE DEPARTMENT OF PUBLIC WORKS.
11. CONSTRUCTION JOINT AT CENTERLINE NOT REQUIRED FOR ENTRANCES LESS THAN 16' WIDE AT THE PROPERTY LINE.
12. ENTRANCE WINGS ARE NOT TO EXTEND BEYOND THE PROPERTY LINES.
13. THE CENTER OF THE ENTRANCE IS TO BE RADIAL TO THE CENTER OF A CUL-DE-SAC, OR WHEN CONSTRUCTED ALONG A CURVED ROAD.
14. IN THE AREA OF PEDSTRIAN WALKWAY, ENTRANCE CROSS SLOPE CANNOT EXCEED 2%.
15. IN THE AREA BETWEEN GUTTER AND PEDESTRIAN WALKWAY, CROSS SLOPE CANNOT EXCEED 12%.

Residential Driveway Entrance

October 2, 2009

CITY OF HAMPTON - DESIGN & CONSTRUCTION STANDARDS

VE - 1

Revised: October 10. 2016

FOR USE ON STREETS DEVELOPED PRIOR TO 2010

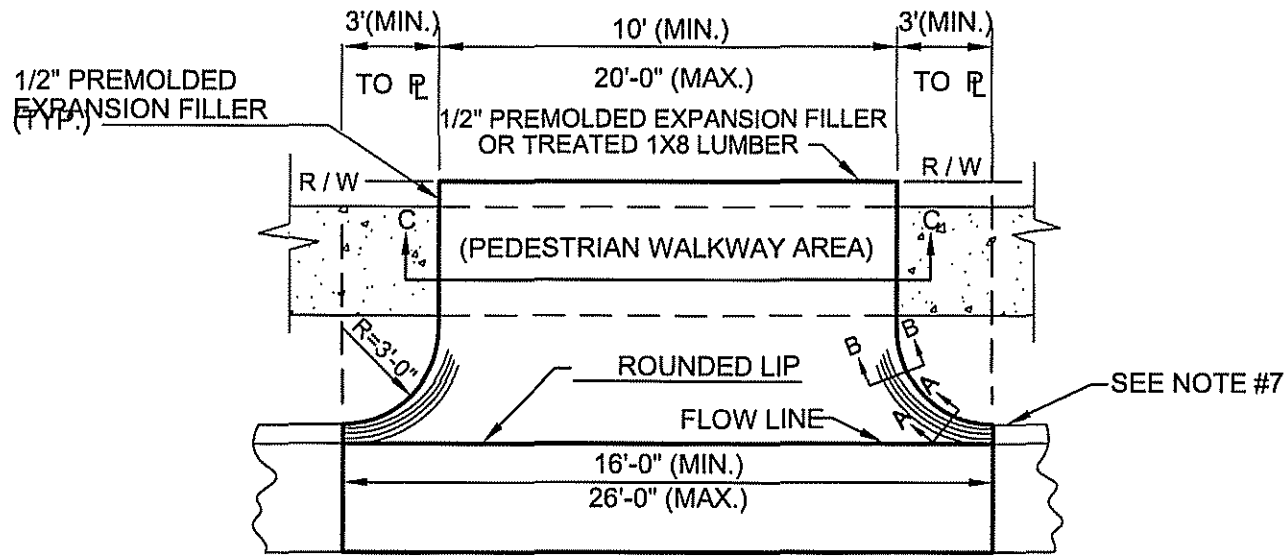

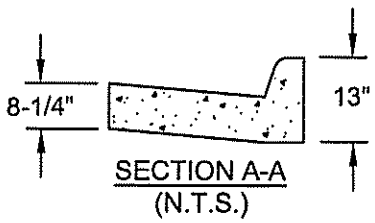

SECTION A-A
(N.T.S.)

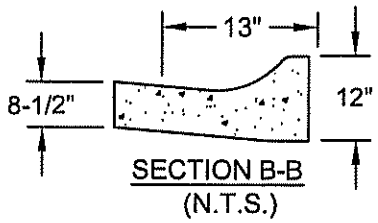

SECTION B-B
(N.T.S.)

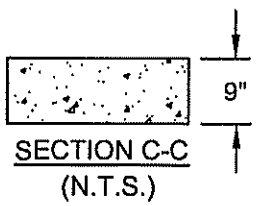

SECTION C-C
(N.T.S.)

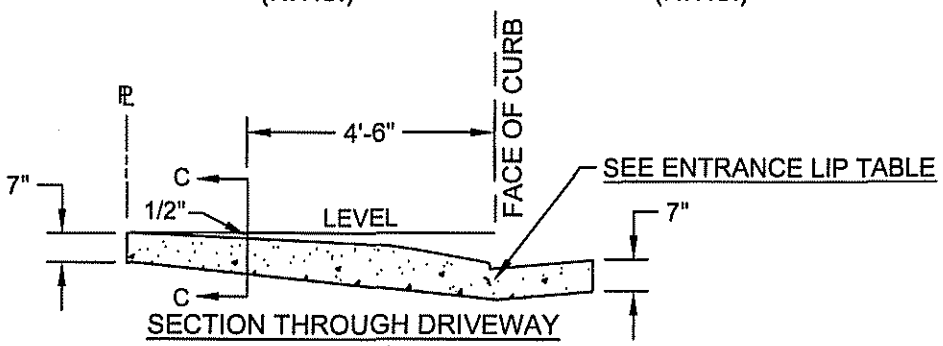

SECTION THROUGH DRIVEWAY
(N.T.S.)

ENTRANCE LIP TABLE	
LIP	% OF SLOPE
1"	19%
1½"	17%
2"	15%

Sheet 1 of 2

Residential Driveway Entrance

October 2, 2009

CITY OF HAMPTON - DESIGN & CONSTRUCTION STANDARDS

VE - 2

Revised: October 31, 2014

NOTES:

1. ALL CONCRETE IS TO BE 3,000 P.S.I. (28 DAY) AIR ENTRAINED BROOM FINISHED. EXPOSED AGGREGATE, BRICKS OR PAVER BLOCKS MAY BE USED AS AN ALTERNATE. HOWEVER, IF THE ENTRANCE IS REPLACED BY THE CITY OF HAMPTON, ONLY BROOM FINISHED CONCRETE WILL BE USED.
2. CONCRETE IS TO BE CURED WITH AASHTO APPROVED LIQUID MEMBRANE SEALANT.
3. COMPACTED SUB-BASE is TO BE APPROVED BY INSPECTOR.
4. BRICK OR PAVER BLOCK ENTRANCES MUST BE CONSTRUCTED TO THE CITY OF HAMPTON PAV-1 OR PAV - 2 CROSS SECTION.
5. WHERE CONCRETE HAS BEEN REMOVED, NEW SIDEWALK IS TO BE FORMED AND POURED ALONG WITH THE ENTRANCE. SIDEWALK IS TO BE REMOVED, AND REPLACED, BACK TO THE NEXT CONSTRUCTION JOINT.
6. NO WATER METERS / VALVES ARE ALLOWED IN ENTRANCE. CONTACT NNWW FOR RELOCATION.
7. NO SANITARY SEWER CLEANOUTS ARE ALLOWED IN ENTRANCE.
8. **IF THE EXISTING C & G JOINT IS WITHIN 24" OF ENTRANCE, REMOVE AND REPLACE C & G TO THAT JOINT.**
9. **REFER TO CURRENT VDOT ROAD & BRIDGE SPECIFICATIONS FOR CONCRETE POURING STANDARDS.**
10. MONOLITHIC POUR OF DRIVEWAY AND CURB & GUTTER IS REQUIRED FOR INITIAL INSTALLATIONS (NEW SUBDIVISION, STREET RE-CONSTRUCTIONS AND FIRST TIME DRIVEWAYS WHERE EXISTING CURB AND GUTTER EXISTS). REPLACEMENT OF EXISTING DRIVEWAYS WILL BE BASED UPON THE CONDITION OF THE CURB AND GUTTER AS DETERMINED BY THE DEPARTMENT OF PUBLIC WORKS.
11. CONSTRUCTION JOINT AT CENTERLINE NOT REQUIRED FOR ENTRANCES LESS THAN 16' WIDE AT THE PROPERTY LINE.
12. ENTRANCE AT STREET IS NOT TO EXTEND BEYOND THE PROPERTY LINE.
13. IN AREA OF PEDSTRIAN WALKWAY, ENTRANCE CROSS SLOPE CAN NOT EXCEED 2%.
14. IN AREA BETWEEN GUTTER AND PEDESTRIUAN WALKWAY, CROSS SLOPE CANNOT EXCEED

Residential Driveway Entrance

October 2, 2009

CITY OF HAMPTON - DESIGN & CONSTRUCTION STANDARDS

VE - 2

Revised: October 31, 2014

FOR REPAIR / REPLACEMENT OF EXISTING VE-3 ONLY

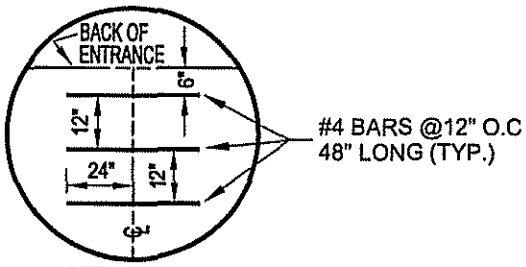

DETAIL (N.T.S.)

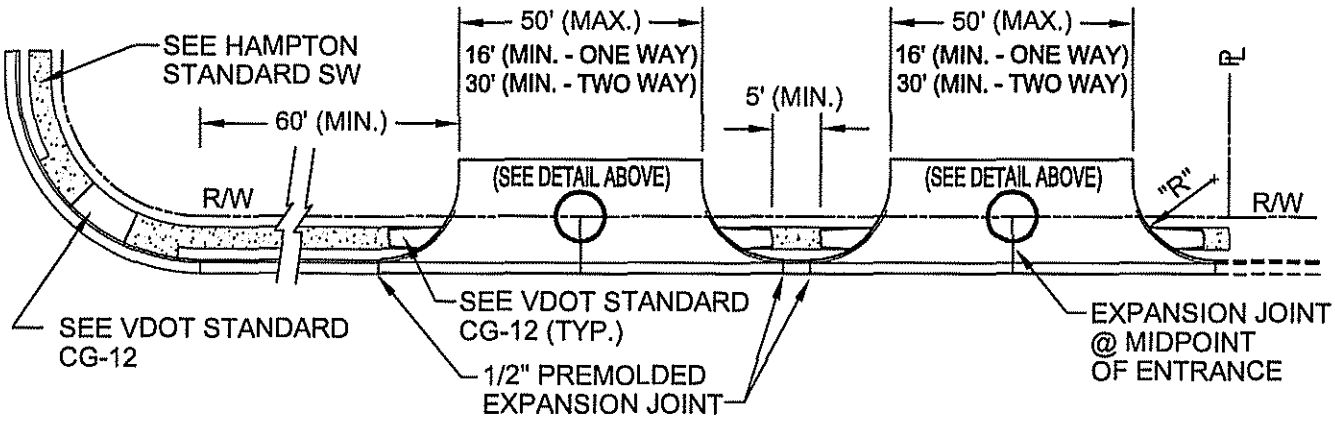

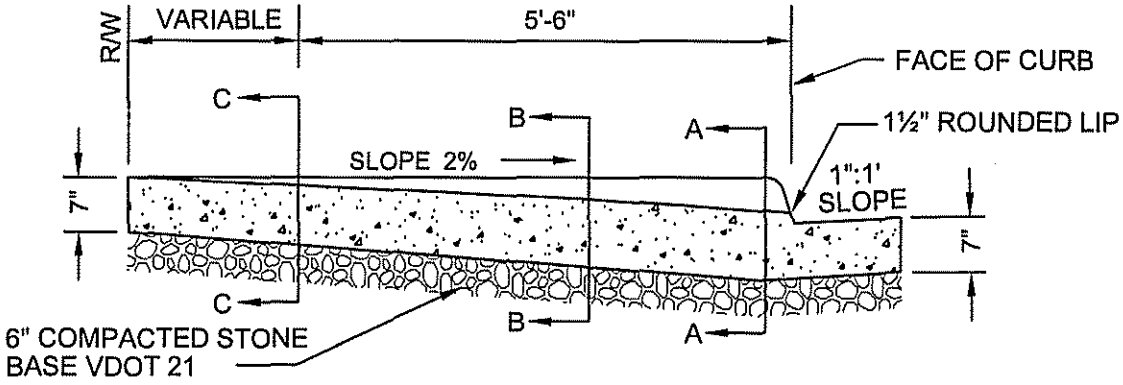

SECTION THROUGH DRIVEWAY
(N.T.S.)

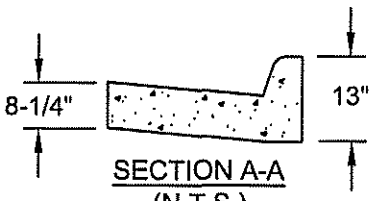

SECTION A-A
(N.T.S.)

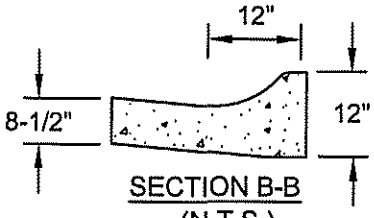

SECTION B-B
(N.T.S.)

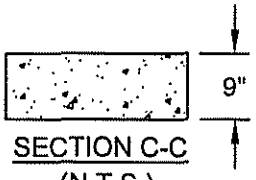

SECTION C-C
(N.T.S.)

Sheet 1 of 2

Commercial Driveway Entrance

October 2, 2009

CITY OF HAMPTON - DESIGN & CONSTRUCTION STANDARDS

VE - 3

Revised: Mar. 15, 2017

NOTES:

1. ALL CONCRETE TO BE 3,000 P.S.I. (28 DAY) AIR ENTRAINED BROOM FINISHED.
2. CONCRETE IS TO BE CURED WITH AASHTO APPROVED LIQUID MEMBRANE SEALANT.
3. COMPACTED SUB-BASE TO BE APPROVED BY INSPECTOR.
4. WHERE CONCRETE HAS BEEN REMOVED, NEW SIDEWALK IS TO BE FORMED AND POURED ALONG WITH ENTRANCE, SIDEWALK IS TO BE REMOVED, AND REPLACED, BACK TO THE NEXT CONSTRUCTION JOINT.
5. NO WATER METERS / VALVES ARE ALLOWED IN ENTRANCE. CONTACT NNWW FOR RELOCATION.
6. NO SANITARY SEWER CLEANOUTS ARE ALLOWED IN ENTRANCE.
7. IF THE EXISTING C & G JOINT IS WITHIN 24" OF ENTRANCE, REMOVE AND REPLACE C & G TO THAT JOINT.
8. REFER TO CURRENT VDOT ROAD & BRIDGE SPECIFICATIONS FOR CONCRETE POURING STANDARDS.
9. MONOLITHIC POUR OF DRIVEWAY AND CURB & GUTTER IS REQUIRED FOR INITIAL INSTALLATIONS (NEW SUBDIVISIONS, STREET RECONSTRUCTIONS AND FIRST TIME DRIVEWAYS WHERE EXISTING CURB AND GUTTER EXISTS). REPLACEMENT OF EXISTING DRIVEWAYS WILL BE BASED UPON THE CONDITION OF THE CURB AND GUTTER AS DETERMINED BY THE DEPARTMENT OF PUBLIC WORKS.
10. ENTRANCE AT STREET IS NOT TO EXTEND BEYOND THE PROPERTY LINES.
11. RADIUS "R" IS TO BE 15' (25' MAX.) UNLESS OTHERWISE DETERMINED BY THE DIRECTOR OF PUBLIC WORKS OR DESIGNEE.
12. "DO NOT ENTER" SIGNS (R5-1) ARE REQUIRED ON EACH SIDE OF AN ENTRANCE BEING USED TO EXIT THE PROPERTY.
13. IN AREA OF PEDSTRIAN WALKWAY, ENTRANCE CROSS SLOPE CAN NOT EXCEED 2%.
14. IN AREA BETWEEN GUTTER AND PEDESTRIUAN WALKWAY, CROSS SLOPE CANNOT EXCEED 12%.

Commercial Driveway Entrance

October 2, 2009

CITY OF HAMPTON - DESIGN & CONSTRUCTION STANDARDS

VE - 3

Revised: Mar. 15, 2017

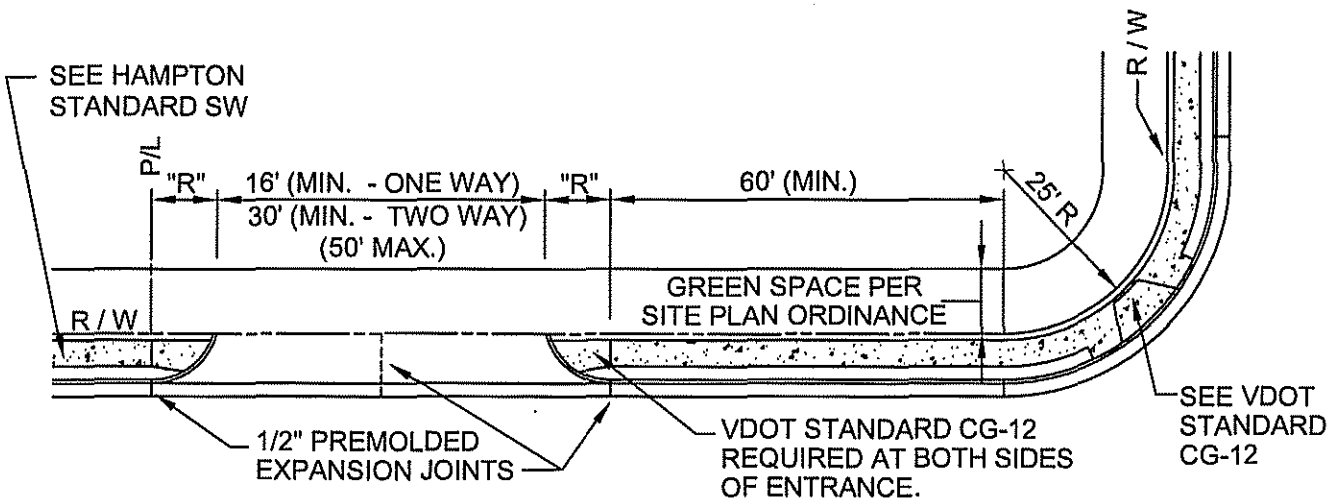

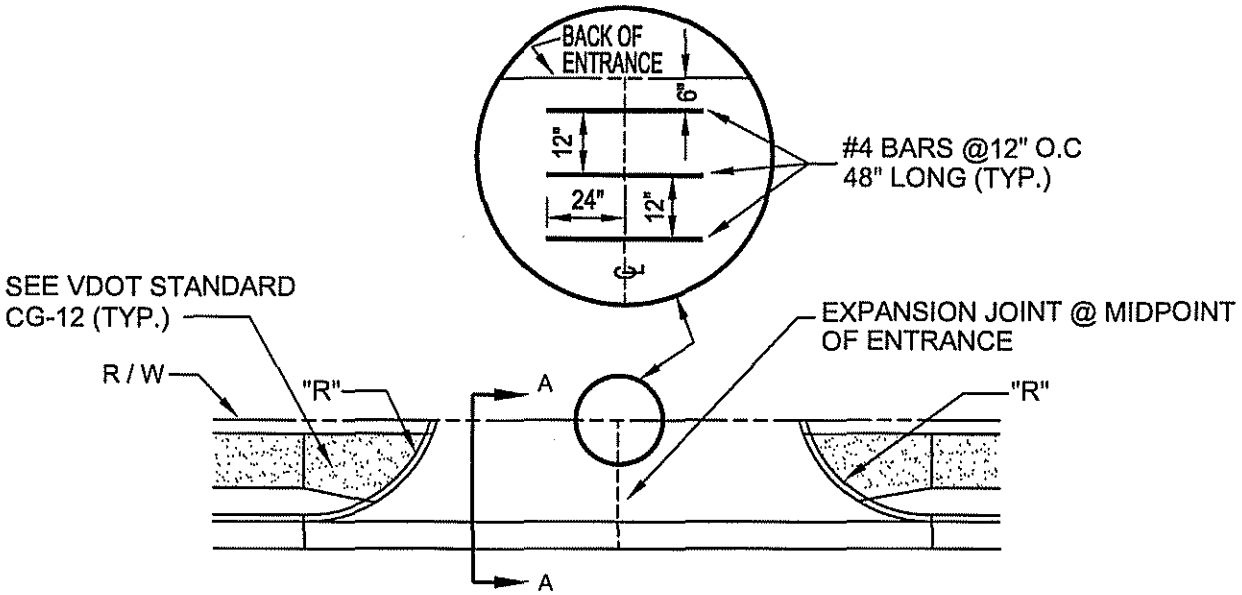

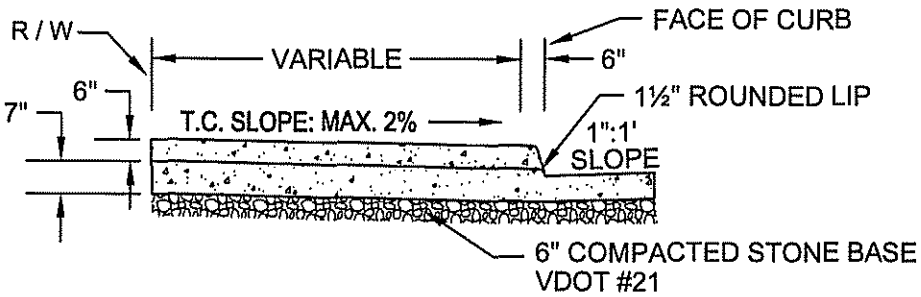

SECTION A-A

(N.T.S.)

Sheet 1 of 2

Commercial Driveway Entrance

October 2, 2009

CITY OF HAMPTON - DESIGN & CONSTRUCTION STANDARDS

VE - 3A

Revised: Mar. 15, 2017

NOTES:

1. ALL CONCRETE TO BE 3,000 P.S.I. (28 DAY) AIR ENTRAINED BROOM FINISHED.
2. CONCRETE IS TO BE CURED WITH AASHTO APPROVED LIQUID MEMBRANE SEALANT.
3. COMPACTED SUB-BASE TO BE APPROVED BY INSPECTOR..
4. GUTTER PAN IS TO BE REMOVED AND REPLACED IN A MONOLITHIC POUR WITH THE ENTRANCE.
5. RADIUS "R" IS TO BE 15' (25' MAX.) UNLESS OTHERWISE DETERMINED BY THE DIRECTOR OF PUBLIC WORKS OR DESIGNEE.
6. "DO NOT ENTER" SIGNS (R5-1) ARE REQUIRED ON EACH SIDE OF AN ENTRANCE BEING USED TO EXIT THE PROPERTY.
7. CONSTRUCTION JOINT AT CENTERLINE FOR APRONS GREATER THAN 10' WIDE AT PROPERTY LINE.
8. MONOLITHIC POUR OF DRIVEWAY AND CURB AND GUTTER IS REQUIRED FOR INITIAL INSTALLATIONS (NEW SUBDIVISION, STREET RECONSTRUCTIONS AND FIRST TIME DRIVEWAYS WHERE EXISTING CURB & GUTTER EXISTS). REPLACEMENT OF EXISTING DRIVEWAYS WILL BE BASED UPON THE CONDITION OF THE CURB & GUTTER AS DETERMINED BY THE DEPARTMENT OF PUBLIC WORKS.
9. NO SANITARY SEWER CLEANOUTS ARE ALLOWED IN ENTRANCE.
10. IF THE EXISTING C & G JOINT IS WITHIN 24" OF ENTRANCE, REMOVE AND REPLACE C & G TO THAT JOINT.
11. REFER TO CURRENT VDOT ROAD & BRIDGE SPECIFICATIONS FOR CONCRETE POURING STANDARDS.
12. ENTRANCE AT STREET IS NOT TO EXTEND BEYOND THE PROPERTY LINES.

Commercial Driveway Entrance

October 2, 2009

CITY OF HAMPTON - DESIGN & CONSTRUCTION STANDARDS

VE - 3A

Revised: Mar. 15, 2017

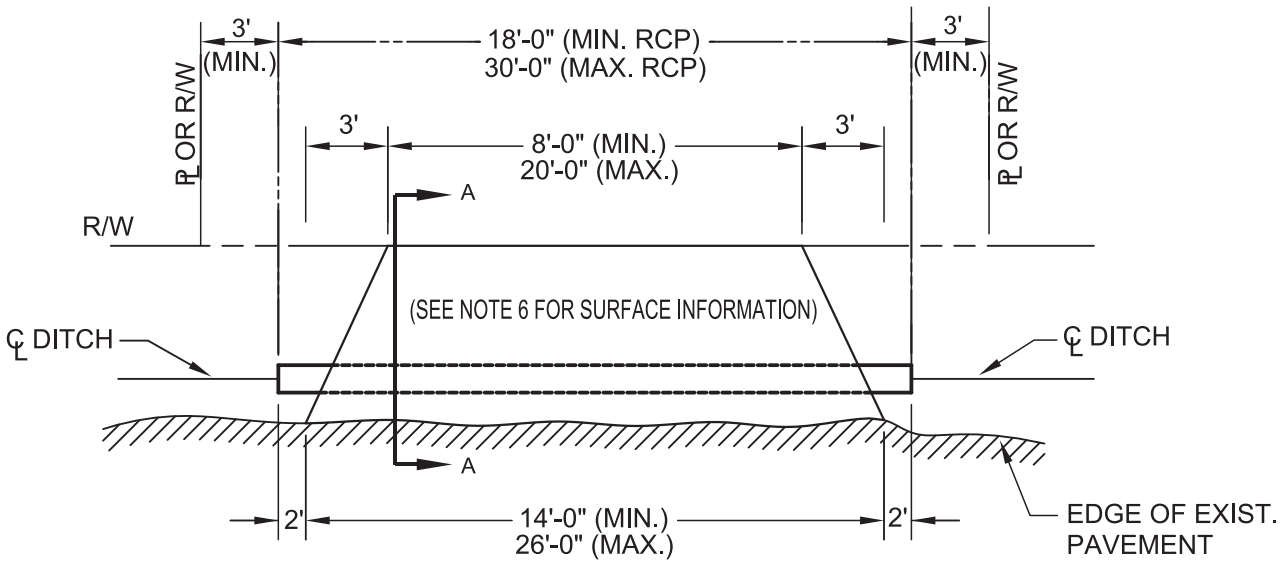

ENTRANCE DETAIL
(N.T.S.)

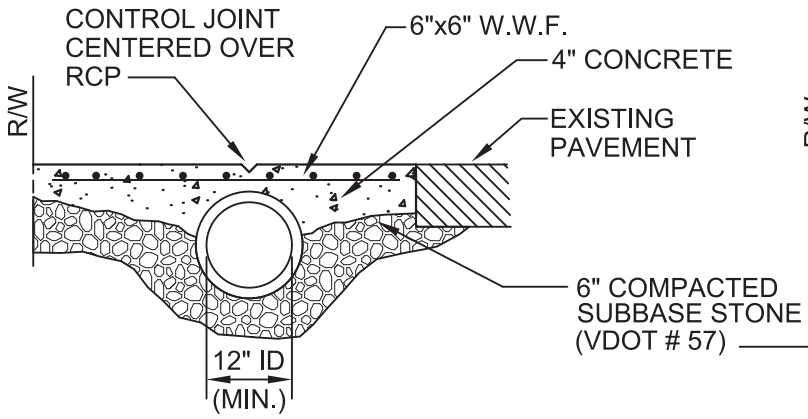

CONCRETE RESIDENTIAL STANDARD
SECTION A-A
(N.T.S.)

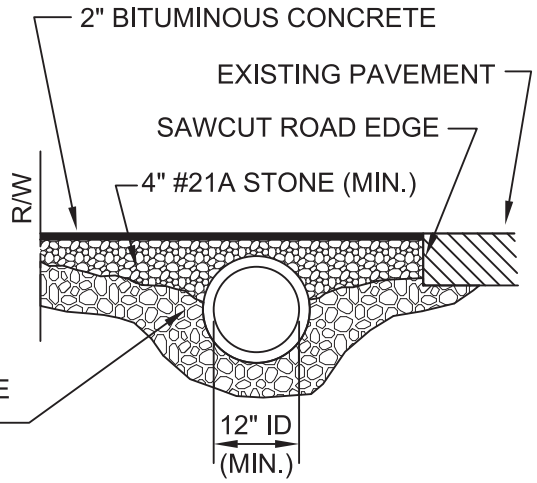

RESIDENTIAL STANDARD
SECTION A-A
(N.T.S.)

NOTES:

1. MINIMUM 16 L.F. R.C.P. C-76 CLASS III REQUIRED.
2. DITCH IS TO BE CLEANED AND REGRADED TO DRAIN.
3. ALL JOINTS ARE TO BE SEALED WITH MORTAR.
4. ALL STONE IS TO BE #21 CRUSHER RUN STONE AS PER CURRENT VDOT ROAD & BRIDGE SPECIFICATIONS.
5. PIPE SIZE AND GRADE ARE TO BE PROVIDED BY THE DEVELOPER FOR CITY REVIEW AND APPROVAL.
6. SURFACE TO MATCH NEIGHBORHOOD TYPICAL AND REQUIRES PUBLIC WORKS APPROVAL PRIOR TO PLACEMENT.
7. COMMERCIAL VE-5 ENTRANCES ARE TO BE APPROVED, ON AN INDIVIDUAL BASIS, BY THE CITY OF HAMPTON PUBLIC WORKS - STREETS DIVISION.
8. ELLIPTICAL PIPE, OF THE SAME CAPACITY AS CIRCULAR PIPE, MAY BE USED.
9. FOR USE ON CITY STREETS WITHOUT CURB & GUTTER ONLY .

Vehicular Driveway Entrance

October 2, 2009

CITY OF HAMPTON - DESIGN & CONSTRUCTION STANDARDS

VE - 5

Revised: June 29, 2012

City of Hampton

Addendum

Design & Construction Standards

June 29, 2012

1st Edition

PUBLIC WORKS

Overview

This document provides the Public Works specifications and standards for design and construction that apply to City rights-of-way, easements, and other City-owned property as well as private property development. It is also a reference to policies, procedures and ordinances related to public improvements for infrastructure.

This manual is a supplement to other City ordinances (Zoning, Site Plan, Stormwater, and Subdivision) and does not, in any way, waive specific requirements of such ordinances.

This manual provides flexibility for items such as design parameters, accepted engineering practices, and operational requirements as long as the goals of longevity, long-term economy, functionality, reasonable maintenance, and other sound engineering practices of the system are met.

The Public Works Design & Construction Standards shall be used for design, however, in the event that the standards will not accommodate a design specific to the project, the designer shall submit, prior to submittal or in conjunction with the submittal, the proposed standard for review and approval by the Director of Public Works (DPW) or his designee.

These specifications and standards are intended to be flexible and adaptable as new materials, equipment, and methods become available. The DPW will continue to review and update this annually. The DPW may modify the specifications and standards in order to preserve noteworthy features or otherwise enhance the amenity of neighborhoods only upon findings that the public purposes of the design and construction standards would be met to at least an equivalent degree by such modification.

The user of this manual, in applying these specifications and standards, must employ sound professional engineering judgment to assure that each design, and the subsequent construction, will result in a functional infrastructure that is in the best interests of the health, safety, and welfare of the public.

Unless otherwise stated, refer to the Regional Construction standards for items not included in this document or the Public Works Design and Construction Standards.

TABLE OF CONTENTS

	Page Number(s)
Overview	
Table of Contents	**3-4**
Chapter I – Drainage	**5-7**
A. General Statement	
B. Surface Drainage	
C. Open Ditches	
D. Drainage Outfalls, Culverts & Endwalls	
E. Design Information	
Chapter II – Standards for Streets and Circulation	**8-10**
A. General Statement	
B. Design and Layout	
C. Materials	
D. Curbs, Gutters & Sidewalks	
E. Pavement Design	
F. Street Signs	
Chapter III –Sewage Disposal System	**11-17**
A. General Statement	
B. Design Standards	
C. Flow Acceptance Process	
D. Pump Station Design	

Chapter IV – Miscellaneous Requirements **18-21**

A. As-Built Drawings

B. Traffic Impact Study

C. Development Within Chesapeake Bay Preservation District

CHAPTER I

DRAINAGE

A. General Statement

Every subdivision shall have a drainage system adequate for the type of development proposed and related to the existing or potential surrounding development, and will form a logical part of a coordinated system minimizing potential drainage problems for the general area. No plan or development shall create potential or actual impoundment of water on, or discharge of water onto, adjacent property that would (i) affect adversely existing development, or (ii) increase problems of future development on such adjacent property, except with a recorded drainage easement from the adjoining property owners affected and the approval of the DPW. The DPW is empowered to require such changes in plans or to establish such minimum and maximum elevations and gradients in particular subdivisions or to require employment of such measures as onsite retention of storm water as necessary to provide for orderly and efficient development of coordinated drainage systems, even though the drainage proposed for a particular subdivision might be adequate for the subdivision itself. In addition, where adjoining lands in districts with varying improvement requirements or in other cases where similar adjustments are necessary, the DPW is empowered to establish such transitional requirements as to types of curbs and gutters, storm drains and the like as are appropriate and reasonably necessary in the circumstances of the case. Approval of the DPW will not release the liability of the developer from the requirements of a safe and functional design.

B. Surface Drainage

All surface drainage shall be piped with adequate size pipe wherever the approved flow-line grade is sufficiently below the surface of the finished ground to permit the installation of the proper size pipe and to allow for one foot minimum cover.

Pipe Size Minimum (inches)	Pipe Class/Material	Preferred Cover (feet)
12	Class III, RCP	3
12	Class II, RCP*	1-2
12	HDPE*	1-2

* shall be located outside of the public right of way and not subject to traffic loading.

C. Open Ditches

In the R-LL, R-22, R-33, and R-43 zoning districts, the subdivider and or developer may, upon the approval of the DPW, substitute the curb and gutter requirement with an open drainage system.

Open ditches approved by the DPW shall have a minimum side slope not steeper than two 2' horizontally for each one 1' of rise, and a minimum longitudinal slope of one 1 %.

D. Drainage Outfalls, Culverts & Endwalls

All outfalls will provide the appropriate end protection per Virginia Department of Transportation (VDOT) standards, and will avoid, if at all possible, impacts to the Chesapeake Bay Preservation District (CBPD). Culverts shall be designed in accordance with VDOT design standards and details. End walls shall be provided as required per VDOT standards. Outfall analysis shall be per the Virginia Stormwater Management Handbook. All standards refer to the latest edition.

E. Design Information

The hydrology and hydraulic analysis is for the 10-year design frequency. Structures and pipe shall be sized per the VDOT Drainage Manual (rational method). Refer to Section 9.3 of the VDOT Drainage Manual for design criteria for storm drain inlets. Major culverts, bridge crossings, and limited access arterial shall be designed for the 25-year frequency. All engineering calculations, including soil test results, shall be provided with the subdivision plan of development.

As per the VDOT Drainage Manual, all hydraulic design calculations shall be performed utilizing the United States National Oceanic 7 Atmosphere Administration (NOAA) ATLAS 14 Rainfall Precipitation Frequency Data to determine the rainfall intensity for a given recurrence interval "f", inches/hour. The information is most readily and conveniently accessed on NOAA'S internet web site at the following address: http://hdsc.nws.noaa.gov/hdsc/pfds/orb/va_pfds.html.

Unless prior approval is obtained from the DPW throat lengths for curb inlets in residential subdivisions shall not exceed six feet.

F. Maintenance of Drainage Easements

The Department of Public Works (the Department) shall maintain an easement to provide a safe facility for the public and to protect the roadway and its drainage system when the Department personnel deem it appropriate and necessary. Generally, there are three types of recorded easements. The first is recorded in the name of and obtained by the City of Hampton to resolve individual drainage problems or as a part of a road improvement project. The second is dedicated to the City for public use as part of a

subdivision developed under the City ordinances. The third is an easement obtained by a private party. The departments' responsibility regarding the three types of easements is as follows:

a) Drainage Easements Acquired by the City

   i. The Department assumes maintenance responsibility within the limits of the drainage easement.

b) Drainage Easements Dedicated to the City as Part of a Subdivision Plat

   i. The Department will maintain only that portion of the drainage easement that falls within the right-of-way limits accepted by the Department when the street is added to the city-maintained system of roadways.

   ii. Work within the easement, but outside of the right-of-way will only be performed when obstructions or structural failure affect the safety of the right-of-way due to back up of storm water into the travel lane(s), and may include rear yard ditches or best management practices (BMPs).

c) Drainage Easements Obtained by Private Parties

   i. The Department has no maintenance responsibility.

CHAPTER II

RIGHTS OF WAY

A. General Statement

Unimproved rights-of-way in previously recorded subdivisions shall provide, per Section 35.71 of the City code, the minimum pavement cross section or as determined by the DPW.

Reserve strips controlling sole access to public streets shall be prohibited unless their control is dedicated to the City under conditions as may be approved by the DPW.

If approved streets in a subdivision are not to be dedicated to the City, the subdivision plat and all deeds conveying lots in the subdivision shall contain a statement advising that the streets in the subdivision shall not be maintained by VDOT or the City. All streets whether to be dedicated to the City or intended to be private shall meet the latest edition of the public works design and construction standards. Any modification of these standards as they apply to streets must have the concurrence of the fire chief as set forth in section 35-65 of the City code. Grantors of any subdivision lot to which such statement applies shall include the statement on each deed of conveyance. In the event streets that were initially private and are subsequently proposed to be dedicated to the City as public streets, the property owners served shall, at no cost to either the City or VDOT, cause the streets to meet the prevailing minimum standards governing VDOT's acceptance of the streets as part of the secondary system.

Minimum longitudinal street grades shall be 0.30% minimum except at the cul-de-sac, which will have a minimum longitudinal street grade of 0.50%.

B. Design and Layout

In order to assist in implementing the transportation policies of the Hampton Community Plan, the Department has established that an interconnected street system is necessary in order to promote and protect the public health, safety and welfare, to provide adequate access for emergency and service vehicles, to encourage non-vehicular opportunities such as pedestrian and bicycling, and to provide continuous and logical traffic routes.

Design and circulation shall conform to the most advantageous development of adjoining areas and conform or provide the following:

a) Street continuity of appropriate streets (planned, adjacent, or contiguous).

b) Generally intersect at right angles, or as near as feasible.

c) Street off-sets shall be avoided.

d) On limited access streets, rights-of-way for service drives shall extend the full length of the subdivision.

e) The number of streets intersecting with existing or proposed public streets shall be held to a minimum, and shall not include more than four street approaches.

f) When a subdivision abuts one (1) side of any existing street or roadway shown on a plat of record or included in the public street system, the applicant shall be required to dedicate one-half of any right-of-way necessary to make such street comply with the minimum width fixed for the same, measured from the right-of-way centerline.

When a site plan abuts one (1) side of any existing street or roadway shown on a plat of record or included in the public street system, the applicant shall be required to reserve one-half of any right-of-way necessary to make such street comply with the minimum fixed width fixed for the same, measured from the right-of-way centerline.

g) Cul-de-sac streets shall have an appropriate turning circle having a minimum right-of-way diameter of 105 feet. They shall not be longer than 500 feet, including the ball, unless approved by the DPW.

h) All street intersections involving dedication of public right-of-way, the right-of-way lines shall be established in the following manner: Each intersection corner right of way shall be designed with a radial curve no less than 25 feet. Once established, the right of way will become a line drawn from the point of curvature to the point of tangency (the long chord) of the curve.

i) Street curbs intersections with alleys shall be rounded with a minimum radius of 10’ at the back of curb.

j) Any dedicated public street developed in conjunction with a condominium project adjacent to or within the condominium project but not as part of it shall comply with the minimum requirements.

k) Commercial parcels shall be served by a system of joint use entrances, drive aisles, and cross-access easements provided along arterial and collector roadways. The number of public street entrances permitted shall be the minimum necessary to provide reasonable access, as determined by the subdivision agent or DPW.

l) Residential parcels shall be served by not more than one entrance.

m) To minimize the potential conflict of a vehicle entering or exiting a drive entrance, the drive entrance must intersect with the street of lower traffic volume.

C. Materials

Sand, clay, and gravel mixture shall not be used as a base material for streets in any subdivision. Crushed concrete will not be allowed unless a materials certification is provided by a licensed geotechnical engineer, and it meets the VDOT special provision for crushed hydraulic cement concrete (used as a sub base and aggregate base material).

D. Curbs, Gutters & Sidewalks

In the R-LL, R-22, R-33, and R-43 zoning districts, the subdivider and/or developer may, upon the approval of the DPW delete the sidewalk requirement and replace the curb and gutter with an open drainage system.

Curb and gutter will not be required in a 2-lot subdivision unless the subdivision abuts curb and gutter on each adjacent side. Unless otherwise provided, curb and gutter is required along the right of way frontage of all 3-lot subdivisions.

E. Pavement Design

The proposed pavement must meet or exceed the minimum standards. Alternately, the pavement design may be based upon the projected average daily traffic (ADT) and soil conditions (CBR/SSV), designed per VDOT Pavement Design Guide for Subdivision and Secondary Roads in Virginia, and approved by the DPW. Turn lanes on arterial or collector streets must be designed per AASHTO.

F. Street Signs

In all subdivisions, metal street signs of standard design approved by the DPW for use on all City streets shall be erected on metal poles by the Department, at points to be designated by the DPW, and paid for in advance of erecting by the subdivider and or developer.

Other street signs may be permitted upon the approval of the DPW. If such signs are approved, the subdivider and/or developer or his designee shall be responsible for the continuing maintenance of the signage. In the event the signage is not repaired or replaced, the City shall replace the signs with metal street signs of standard sign design.

CHAPTER III

SEWAGE DISPOSAL

A. General Statement

Connection

The City shall have the right at any and all times to make, connect, or permit the connection of any other sewer or sewer connections or extensions with the sewer system, at any point or points, and shall have the right at any and all times to take and dispose of the sanitary sewage through the sanitary sewer system in the area, from persons beyond and adjacent to any subdivision and originating on other properties.

Design Standards

The developer and/or subdivider shall pay all costs of engineering, inspection, and sewer connection fees, and such other costs as may be involved in the connection to the public sewer system.

Collection systems shall be designed per the SCAT regulations (9VAC 25-790 1/1/2008) in conjunction with the State Water Control Board Enforcement Action, Special Order by Consent, as accepted by the Hampton City Manager, September 14, 2007, along with the following requirements:

a) Grades for gravity sanitary sewer less than the minimum required per the SCAT regulations must receive prior approval from Public Works, Wastewater.

b) Proposed sewer laterals and water service shall be centered in the lot with a ten 10’ minimum separation distance between the utilities. Sanitary sewer cleanouts shall not be permitted in driveway aprons or sidewalks.

c) The minimum cover is 3’ from top of pipe to existing/proposed grade.

The Hampton Roads Regional Sewage Flow Projection Data (April 21, 2008), shall be used to determine flow generated by any project.

Hampton Roads Regional Sewage Flow Protection Data (April 21, 2008)

Discharge Facility	Contributing Design Units	Flow Gallons Per Day/Unit	Flow Duration Hours	Peak Factor
Dwellings	Per Residential Unit	310	24	2.5
Schools	Per Person	10	8	3
Boarding Schools	Per Person	75	16	3
Motels & Hotels	Per Room	130	24	3
Trailer Courts, Apartments, Condos, Townhouses & Time Shares	Per Unit	310	24	2.5
Restaurants (including fast food)	Per Seat	30	16	3
Service Stations	Per Gross SF	0.4	16	3
Shopping Centers	Per Gross SF	0.2	12	3
Hospitals	Per Bed	300	24	3
Nursing Homes/Assisted Living	Per Bed	160	24	3
Doctor's offices in medical centers	Per Gross SF	0.25	12	3
Laundromats	Per Machine	500	16	3
Community Colleges	Per Student & Faculty	10	12	3
Theaters (auditorium type)	Per Seat	2.5	12	3
Picnic Areas	Per Person	5	12	3
Camps, Resort Day & Night, w/limited plumbing	Per Site	50	24	3
Luxury Camps w/flush toilets	Per Site	100	24	3
Warehouse	Per Gross SF	0.05	24	3
Convenience Store	Per Gross SF	0.5	24	3
Office Building	Per Gross SF	0.1	12	3
Fitness Center	Per Gross SF	0.1	16	3
Religious Assembly	Per Seat/ Main Assy. Rm.	2.5	6	3
Heavy Industrial	Per Gross SF	0.35[1]	16	3
Light Industrial	Per Gross SF	0.1[1]	16	3

Table Notes:

1.) The stated flow per day per unit is provided as a guide and should only be used if known data for similar heavy or light industrial facilities is not available.

2.) For undeveloped property zoned other than residential, average daily flows may be projected at a rate of 1,000 gallons per day (gpd) per acre. Consideration should be given to designated wetlands and Chesapeake Bay Preservation Act Resource Protection Areas, which should be excluded from the gross acreage. A peaking factor of 3 shall be used.

3.) For undeveloped property zoned residential, average daily flows may be projected at a rate of 310 gpd per unit based on the zoning density. A peaking factor of 2.5 shall be used.

4.) Flow duration should be taken into account for the design of on-site infrastructure and when discharging into publicly owned force mains, but need not be considered for downstream publically owned gravity collections systems. Additionally, the SCAT Regulations require a peaking factor of 4 be applied to the average daily flow when designing laterals and submains. For example, in designing on-site sewer lateral or an on-site/private pump station for a shopping center that has a gross square footage of 7,500 SF the flow duration should be applied as follows:

   a.) 7,500 SF x 0.20 gpd/SF = 1,500 gpd

   b.) 1,500 gpd/(12 hr duration day x 60 min/hr) = 2.08 gpm

   c.) 2.08 gpm x 4 (peak factor per SCAT Regulations) = 8.32 gpm

   d.) Sound engineering judgment must be used in all applications of these flow projection guidelines.

B. Use of Public Sanitary Sewer

The developer and or subdivider will not discharge into the sewer system any storm water, surface, or subsurface water. Additionally, the developer and/or subdivider will not discharge any waste, effluent, or other matter prohibited by any ordinance, rule, or regulation of the City or any other appropriate agency or government having jurisdiction. The developer and/or subdivider will not permit under any circumstances the discharge of sewage originating on any other property or premises, either directly or indirectly, into the sewer system. The developer and/or subdivider may, with the approval of the City, agree in writing and by properly recorded instruments with owners of adjacent properties to construct joint facilities.

A structure or building lot is available to public sewer if the building setback line of the lot is within 1,000' of the public sewer and has either property or easement access to public sewer. Whether a structure can be served by gravity sewer or pump shall have no bearing on the structures or availability of the building lot to sewer.

When public sewer is available, the owner of all residential, commercial, business and all other non-residential structures shall be required to connect to the public sewer system.

All persons served by the City of Hampton's wastewater system shall pay for wastewater system service in accordance with Sec. 30-48 of the City code.

C. Private Sewage Disposal Systems

Private sewage disposal systems other than conventional septic systems are prohibited and require approval and permitted by the local health department.

Where a public sanitary sewer is not available, the building sewer may be connected to a septic system if the site is determined by the health officer to be suitable for a septic system to operate properly.

D. Flow Acceptance Process

The following guidelines were developed by the Hampton Roads Regional Consent Order Capacity Team for a regionally consistent flow acceptance process.

a) Localities will issue flow acceptance letters and plan approval prior to the Virginia Department of Environmental Quality (DEQ) approval. The locality plan approval should contain a condition regarding DEQ approval and issuance of the certificate to construct. It is acceptable for a locality to not completely release the plans until other conditions (payment of fees, DEQ approval, etc.) are met provided that the flow acceptance letter is issued.

b) The criteria for issuance of a flow acceptance letter are as follows:

    i. For gravity systems, flows greater than 40,000 gallons per day (average daily flow); or

    ii. For pumped connections to a gravity system, design pump rates greater than 25 gallons per minute (gpm); or

    iii. For pumped connections to a pressurized system, flows greater than or equal to 2,000 gallons per day (average daily flow).

c) The criteria for issuance of a short form flow acceptance letter are as follows:

i. For pumped connections to a gravity system, design pump rates less than or equal to 25 gpm but with flows greater than or equal to 2,000 gallons per day (average daily flow); or

ii. For pumped connections to a pressurized system, flows less than 2,000 gallons per day (average daily flow).

d) The Hampton Roads Sanitation District (HRSD) flow acceptance letter will be issued prior to the locality flow acceptance letter although the review process may be in parallel. HRSD will continue to issue letters to the locality for a specific point in the HRSD interceptor system and at a specific flow rate. The locality will continue to request the HRSD flow acceptance letter.

e) Phased development will be dealt with as submitted. The flow rates and the system as depicted in the application will be considered and, if adequate capacity exists and other considerations are met, the flow acceptance letter will be issued. If a subsequent phase of that development is submitted in the future that was not included in the original application, this will be reviewed at the time of its submittal based on the requirements that exist at the time of submittal.

f) Plans shall note compliance with the Regional Design Guidelines.

E. Pump Station Design

Sewage pump stations that are constructed within the City shall have the station plans and specifications reviewed and approved prior to construction. Two (2) complete sets of plans and specifications shall be submitted to the City for review. These documents shall also be approved by the DEQ for compliance with state regulations and shall have received a certification to construct (CTC) and a certification to operate (CTO) prior to acceptance by the City.

Pump Station Plans

a.) All pump station plans shall conform to the site plan ordinance (latest edition).

b.) Construction plans and details shall be clearly and neatly drawn to scale with proper identification, dimensions, material, and other information necessary to insure the desired construction.

c.) Where general sewer systems provided by the developer and/or subdivider include pumping stations, on-site standby power shall be provided by the developer and/or subdivider per DEQ.

Specifications shall typically be of the Construction Specification Institute (CSI) format and contain technical data on the following:

a.) Proposed Pump Station Equipment

b.) Proposed Construction Methods

Design calculations used for the design of the pump station shall be submitted in report format and include at least the following:

a.)..Projected flow rate/existing and future head conditions.

b.) Data on the characteristics and performance of each pump. Data shall include manufacturer's curve and system curve indicating pumps ability to meet the specified requirements for head, capacity, efficiency, NPSHR, submergence, and horsepower. Curves shall be submitted on 8 ½" by 11" sheets, at as large a scale as is practical. Curves shall be plotted from no flow at shut off head to maximum manufacturer recommended pump capacity. Catalog sheets showing a family of curves will not be acceptable.

c.) Wet well design.

d.) Force main design.

e.) Other pertinent engineering data.

Operation and Maintenance Manuals:

a.) The Contractor shall furnish 4 copies of a loose-leaf type manual that contain complete operation and maintenance instructions for the following equipment.

i. Control System
ii. Air Compressor
iii. Sewage Pumps, Including Pump Curves
iv. Electric Motors
v. Generator Set, Including Transfer Switch Wiring Diagrams
vi. Alarm Systems
vii. Check Valves
viii. Gate Valves
ix. Unit Heaters
x. Lighting

b.) The manual shall include model numbers, a complete parts list, and the names and addresses of applicable subcontractors, suppliers, and manufacturers.

c.) A schedule of values of major pump station items including the building, well, valve pit, pumps, valves, piping, electrical, alarm system, miscellaneous metals (hatches, stairs, ladders, etc.), ventilation, and site work.

d.) The manual shall contain adequate information to satisfy state regulatory agency requirements.

F. Septic Systems

Building or construction of any impervious surface shall be prohibited on the area of all sewage disposal sites or on an on-site sewage treatment system which operates under a permit issued by the state water control board, until the structure is served by public sewer.

G. Pump Station Property Recordation

Pump station properties should be transferred via a deed and attached plat. Plats must be prepared by a duly licensed land surveyor, illustrating all required information pursuant to City and or state code; and deeds will be prepared by the City Attorney's Office ("CAO"). Both documents then will be forwarded to the Grantor for review and execution. Grantor's questions or concerns should be directed to the CAO. Upon execution, the deed and plat should be returned to the CAO for recordation in the Hampton Circuit Court. A copy of the recorded instrument will be forwarded to the Grantor.

H. Pump Station or Sanitary Sewer Upgrades

Where Public Works wastewater determines that adequate capacity does not exist for a proposed development, the City will work with the owner/developer to find an equitable and cost effective solution to increase capacity to the system. In the case of Pump Station upgrades, refer to Sect. 30-6 of the City code for cost participation guidance

CHAPTER IV

MISCELLANEOUS REQUIREMENTS

A. As-Built Drawings

As-Built Drawings - General

The purpose of this section is to set forth procedures for providing "as-built" construction drawings required by the City of Hampton, Department of Public Works, Wastewater and Stormwater Divisions.

The following procedures will be followed when submitting "as-built" drawings for approval:

a) All storm drain and sanitary sewer as-builts will be submitted to Community Development, Development Services Center, and will be reviewed for compliance with this section prior to acceptance and release of maintenance bonds pursuant to section 35-108(F) of the city code.

b) This section applies to any project that requires public infrastructure to be installed, whether built by private development or by the City.

As-Built Drawings – Procedure

It is the responsibility of the owner/developer to provide "as-built" drawings in the format required by section 35-108(F) of the City code to the City Department of Public Works prior to recordation of the final plat. The following process will be followed for the submittal:

a) All "as-built" plan sheets are to be sealed and endorsed by duly licensed professional engineer or land surveyor authorized to do business in the Commonwealth of Virginia.

b) The reviewing agency may use inspection information and perform spot checks to confirm compliance with the "as-built" regulations.

c) As built drawings shall be submitted on an 11" by 17" approved durable tracing medium per Sec. 35-108(F).

d) Plan and profile are required for all public sanitary sewer main and storm drainage systems.

e) The approved plan/profile record drawings and geographic information system (GIS) compatible digital version, i.e., AutoCAD, will be filed in Public Works Drainage or Wastewater.

As-Built Drawings - Technical Requirements

"As-built" drawings should address all changes made from the construction plans and conditions during construction. These changes should be documented on the submitted "as-built" drawings, and should include the following minimum information, including the specified measurement of survey precision:

a) The accuracy of both surface and sub-surface gravity-fed systems will be measured in a survey and recorded to within ± 0.01 foot vertically and ± one foot horizontally at the structure location.

b) The accuracy of curb and gutter measurements will be ± 0.01 foot vertically and ± one foot horizontally at high points, low points, curb returns, and various other positions following good engineering, construction, and surveying practices.

c) Storm water management facility measurements will be accurate to ± 0.1 foot vertically and ± one foot horizontally, including the top of the bank, bottom of the bank, edge of the water, pipes, structures, and setback distances to property lines and/or right-of-way lines and any unusual feature of each storm water management facility.

d) Surface structures of utility service connections and appurtenances (sewer) will be measured to ±one foot of accuracy, horizontally. Stationing and offsets for sewer laterals shall be from the centerline of the constructed sewer main.

e) The project title and names must correspond with the approved subdivision construction documents.

B. Traffic Impact Study

Traffic Impact Study - General

A traffic impact study assesses the impact of a proposed development, zoning change, or special use approval on the transportation system. Its purposes are (1) to ensure that proposed developments or zoning changes do not adversely affect the existing transportation network, (2) to identify any traffic problems associated with access from the site to the existing transportation network, (3) to outline solutions to potential problems, and (4) to present improvements to be incorporated into the proposed development.

The DPW shall determine if the traffic impact assessment shall be submitted with a land use application or site development proposal.

Traffic Impact Study – Determining the Need

A traffic impact study is required when the site generates or attracts 100 total trips per hour during the adjacent street peak hour. Note: 100 vehicle trips may change the level of service on nearby intersections.

The following site specific conditions will be considered in determining the need for a traffic impact study:

a) The potential impact upon the local and regional road networks.

b) The capacity and level of service on the adjacent roadways that will serve the development. Note: existing roadway segments or intersection(s) at or adjacent to the site with level of service C or worse.

c) Roadway geometrics.

d) The type and size of the proposed development.

e) Traffic operations at all intersections that will provide access to the site.

f) Issues of safety and/or traffic operations within the public right-of-way.

g) The site generates or attracts 100 total trips per hour during the adjacent street peak hour. Note: 100 vehicle trips may change the level of service on nearby intersections.

Traffic Impact Study – Responsibility

The owner/developer has the responsibility for assessing the traffic impacts associated with a proposed development. The City serves in a review capacity.

Traffic Study - Contents

a) Introduction - shall include the site location and study area, existing and proposed site uses, existing and proposed nearby uses, and existing roadways and programmed improvements.

b) Analysis of Existing Conditions – shall include daily and peak hour(s) traffic volumes, capacity analysis at critical points, and levels of service at critical points.

c) Analysis of Future Conditions without Development – shall include daily and peak hour(s) traffic volumes, capacity analysis at critical points, will include any programmed improvements that will be in place by the future year, and levels of service at critical points.

d) Trip Generation

e) Site Traffic Distribution and Traffic Assignments

f) Analysis of Future Conditions with Development – shall include future daily and peak hour(s) traffic volumes, capacity analysis at critical points, will include those additional improvements that will be proffered by the developer, and levels of service at critical points.

g) Recommended Improvements – shall include proposed improvements, capacity analysis at critical points (with improvements), and levels of service at critical points (with improvements).

h) Conclusions

C. CBPD Development

For any proposed subdivision located wholly or partially within a Chesapeake Bay Preservation District, the subdivider or developer shall provide copies of wetlands permits or approval letters from the Hampton Wetlands Board, the Virginia Marine Resources Commission, and the U.S. Army Corps of Engineers for any improvements or alterations in tidal wetlands. The DPW shall not approve the subdivision development or site plan until these items have been provided. Final subdivision approval does not absolve the subdivider or developer from any other federal, state, or local permit requirements.